LOBSTER®

Cordless Nut Rivet Setter

MODEL: BN200

Instruction Manual

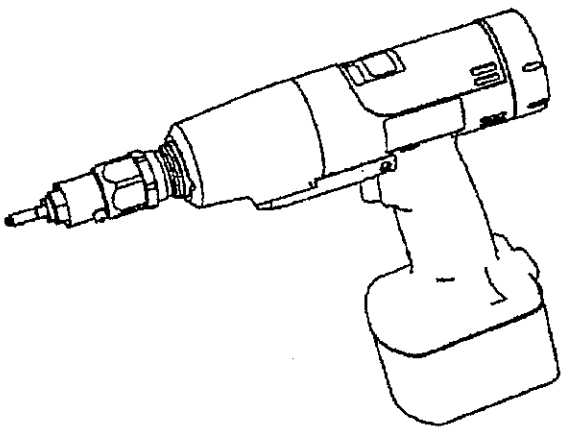

- CONTENTS -

1. SAFETY 3
1.1 WARNING SIGN 3
1.2 SAFETY CONCERNS 3
1.2.1 GENERAL SAFETY PRECAUTIONS 3
1.2.2 SPECIAL SAFETY PRECAUTIONS 6
2. NAME AND SPECIFICATION OF EACH PART 8
2.1 NAME OF EACH PART 8
2.2 SPECIFICATION 8
3. PREPARATION BEFORE USE 9
3.1 MAIN BODY 9
3.2 BATTERY PACK 13
4. HOW TO NUT RIVET SETTER 14
5. CLEANING AND MAINTENANCE 16
5.1 LUBRICATION OF THE SCREW 16
5.2 REPLACING CM RELAY 16
6. TROUBLESHOOTING 17
7. PART DRAWINGS 18
8. STORAGE / ORDERING PARTS 19

Be sure to read this manual before use.
Store this manual with care so that you can refer to it whenever necessary.

LOBTEX CO.,LTD.

■ INTRODUCTION

- This tool is a nut setter that sets a nut rivet to material for such applications as material tightening and accessory installment. We do not design, manufacture or sell intending to other applications.
- This operating manual (called "This manual" afterwards) describes how to use the tool safely and effectively, how to do check and maintenance, and parts information.
- Use nuts for the tool with the specification and strength thoroughly designed and examined.

■ IMPORTANT NOTICES

- Read this manual carefully before using this tool. Follow instructions in this manual for handling this tool, replacing accessories or replacing parts.
- If you have any questions about this manual, consult with the company you purchased this tool or Lobtex Co, Ltd. You may be asked model name or model number.
- It is impossible to foresee all potential dangers and describe them in this manual. You must use this tool with paying enough attention to safety as well as observing the instructions in this manual.
- It is user's responsibility to understand the contents of this manual thoroughly.
- Lobtex Co., Ltd. has the copyright of this manual. It is prohibited to publish, copy or translate to other language without prior consent.

■ IMDEMNIFICATION

- Customer agrees to indemnify and hold Lobtex harmless against any damage, loss, liability or expense arising out of;
  1) Direct or indirect damage or loss caused by abuse, misuse or unauthorized remodeling.
  2) Damages or injuries caused by reconstruction or remodeling without Lobtex written authorization.
  3) Damages or injuries caused by use of parts other than recommended parts by Lobtex.
- Nut itself is not covered under warranty.

1. SAFETY

Followings are safety items to handle this tool.

1.1 WARNING SIGN

This manual includes warning signs shown below to protect users from possible injuries or damages to properties. There are different signs depending on the level of potential damage in case of negligence. For safety, follow the instructions by all means.

Warning Sign	Descriptions
⚠ WARNING	**Indicates a potentially hazardous situation which, if not avoided, could result in death or serious injury.**
⚠ CAUTION	**Indicates a potentially hazardous situation which, if not avoided, may result in moderate injury.**
CAUTION	**Indicates a potentially hazardous situation which, if not avoided, may result in property damage.**

POINT This sign emphasizes important or beneficial information.

1.2 SAFETY CONCERNS

1.2.1 GENERAL SAFETY PRECAUTIONS

This section describes do's and don'ts for safety in handling this tool. Read this manual, and understand the contents to safely use the tool.

⚠ WARNING

- **Use the designated accessories and attachments described in this manual and our catalog.**
  Otherwise, it may cause accidents and injuries.
- **Use safety glasses while working. Also use a dustproof mask while working in the environment filled with dusts.**
  Otherwise, cut pieces may enter into the eyes and nose.
- **Do not use this tool when you feel sick.**
  Use the tool with bad physical condition may cause accidents or injuries.
  When you stop using the tool, turn off the power, remove the battery pack, and ask us or our sales representative for inspection/repair.
- **Do not touch the power supply plug with wet hands.**
  Doing so may cause electric shock.

- **Do not use the charging tools, charger, and battery pack in the humid place, wet place, or the place exposed to rain.**
  Doing so may cause electric shock or emitting smoke.
- **Do not use the battery pack and charger in presence of flammable liquids or gases.**
  Doing so may cause explode and fire.
- **Do not put the battery pack into fire.**
  Doing so may cause explosion and generate toxic substances.
- **Turn off the charger, and pull out the battery pack from the main body in the following cases:**
  - When the cordless nut rivet setter is not used and to be repaired.
  - Always remove the battery pack before performing inspection/maintenance and replacing parts. Otherwise, an intended operation of the cordless nut rivet setter may cause injuries.
  - In the case that other hazards may be predicted. Operation of the main body may cause injuries.
- **Do not charge the battery pack using the other charger.**
- **Charge only the battery pack described in this manual.**
  Otherwise, the battery pack may explode, resulting in injuries and damages.
- **Use the power source with the rating displayed. Do not use the power source from the DC power system or engine generator. Otherwise, the battery pack may be heated abnormally, resulting in fire.**
- **Charge the battery pack with the temperature of 0 or higher and lower than 40℃. Otherwise, the battery pack with may explode and fire may occur.**
  Use the battery pack and the place where is ventilated properly.
- **Do not cover the battery pack and/or charger with a cloth while charging.**
  Doing so may explode the battery pack and cause fire.
- **Do not short-circuit the terminals of the battery pack. Do not put the battery pack in a nail bag.**
  Doing so may cause short-circuit, resulting in emitting smoke, fire, explosion, and so on.

⚠ CAUTION

- **Follow the instructions described in the Instruction Manual when replacing the parts and repairing.**
  If the corresponding instructions are not described in the Instruction Manual, send repair to us or our sales representative.
- **Do not disassemble the charging tools because they are in conformance with the corresponding safety standards.**
- **This tool must be used at organized, uncluttered and clean place.**
  Operation at cluttered place may lead to accident or injuries.

- **Keep work area clean.**
  The work stand and the place with dispersed articles may cause accidents.
- **Understand handling method and operating method thoroughly and operate carefully. Follow instructions in this manual and do not use for any other purposes than intended purpose.**
  Use for other purposes may cause accidents or injuries.
- **Dress properly. Wear rubber gloves and non-slip footwear to perform outdoor work.**
  The slippery gloves and footwear may cause injuries.
- **Keep correct attitude. Always secure your step and keep your balance.**
  Otherwise, you may stumble to be injured.
- **For works at higher places, always wear safety belt to avoid falling-off accidents, as well as avoid falling off of tools or components.**
- **Store idle tools. Store idle tools in a dry and high place where children are inaccessible or store in a locked place.**
  Otherwise, it may cause injuries.
- When you handle oil or grease, obtain the material safety data sheet (MSDS) from the supplier, and follow the described instructions.
- **If the extension cord is used, periodically inspect it. If the extension cord is damaged, request repair to the purchased store or our company.**
  Neglecting periodical inspection and necessary repair may cause electric shock and short-circuit, resulting in fire.
- **Before using the charging tools, check that each part is not damaged, that they work properly, and that they fulfill the specified functions.**
- **Before using the charging tools, check that each part is not damaged.**
  If any damage is found, request repair.
- **Be sure to ask us for our sales representative for repair.**
  If the personnel who are going to repair the tools are without proper knowledge and technology and repairs incorrectly, it may cause accidents and injuries.
- **Only the operator must touch the charging tools and cord of the charger.**
  Otherwise, it may cause injuries.
- **Do not use the charger with the damaged power plug and cord. Do not drop the charger. Do not use the damaged charger.**
  Doing so may cause electric shock and short-circuit, resulting in fire.
- **Follow the instructions and procedures and pay attention to the ambient conditions when using the charging tools.**
  A thoughtless action may cause accidents and injuries.
- **If the charging tools are heated or in the abnormal condition, request inspection and repair.**
- **Use an electrical cord or extension cord of suitable quality when discharging outdoors.**

- **Do not handle the cord of the charger in a rough manner.**
  Otherwise, electric shock and short-circuit may occur, resulting in fire.
  - Do not carry the charger by lifting with its cord, and do not disconnect the power plug from a receptacle by pulling the cord.
  - Do not expose the cord to heat, oil, and pointed corners.
  - Carefully choose the place for charging so that the cord is not stepped on, caught by foot, and damaged by receiving excessive force.
- **Periodically inspect the charger cord. If the cord is damaged ask us or our sales representative to repair.**
  Neglecting periodical inspection and necessary repair may cause electric shock and short-circuit, resulting in fire.
- **Keep the grip area dry and clean condition and away from oil or grease. If the area gets oil-stained, remove it. Oily grip area may lead to injuries.**
- **Do not store the charging tools and battery pack at a place where the temperature may be raised to 50℃ or more (e.g. In a metallic box or in the car in summer, etc.).**
  Doing so may cause deterioration of the battery pack, emitting smoke, and fire.

1.2.2 SPECIAL SAFETY PRECAUTIONS

Not only general precautions, there are cautions especially related to this tool. Read this manual, and understand the contents to safely use the tool.

⚠ WARNING

- **Do not try to set a nut rivet of more than the setting performance of this tool.**
  Using the nut rivet out of the proper size may damage the tool or cause injuries and/or accidents.
- **Do not touch the screw mandrel.**
  You may be injured by the screw part of the screw mandrel. In maintenance, be sure to wear protective gloves.
- **Do not carry the cordless nut rivet setter with finger being on the switch.**
  Doing so may operate the main body, resulting in injuries.

⚠ CAUTION

- **Do not use the tool with the nosepiece detached.**
  It may cause pinched injuries or other accidents/injuries.
- **Perform correct stroke adjustment.**
  Short stroke may cause an incomplete setting of the nut rivet.
  When the stroke is too long, it may damage the screw thread of nut rivet, to cause insufficient intensity at screwing.

- **To perform idle setting, hold the nut rivet by pliers or other tools.**
  Never hold the tip of nut rivet by hand. It may cause pinched injuries between the nut rivet and screw mandrel at reverse rotation.
- **If the motor is stopped due to poor stroke adjustment or overload, do not keep pulling the switch.**
  The motor may be heated up to cause smokes or fire.
- **Use such protective gloves as those not to be winded by the rotation part of this tool.**
- **To store this tool in the blow case (container), remove the battery from the main unit.**
  Any shock may erroneously turn on the switch, to cause malfunction.
  The malfunction may damage the tool component. To avoid this, always remove the battery.
- **If the temperature of the tool becomes high due to continuous use, stop using the tool.**
  Otherwise, increase of temperature may cause damage to the tool or fire by overheat.
- **Do not use the cordless nut rivet setter if it does not start and stop by operating the switch.**
  Abnormal operation may cause injuries.
- **Use the cordless nut rivet setter with the speed suitable for the capability of the charging tool for safe and efficient work.**
  Otherwise, accidents may occur.
- **Do not lock the motor while operating the cordless nut rivet setter.**
  Doing so may cause emitting smoke and fire.
- **If the temperature of the tool becomes high due to continuous use, stop using the tool.**
  Otherwise, increase of temperature may cause damage to the tool or fire by overheat.
- **Stop operation of the cordless nut rivet setter before using the second battery continuously.**
  Otherwise, the cordless nut rivet setter may be heated, resulting in burn.

2. NAME AND SPECIFICATION OF EACH PART

The following figures show name and specification of each part.

2.1 NAME OF EACH PART

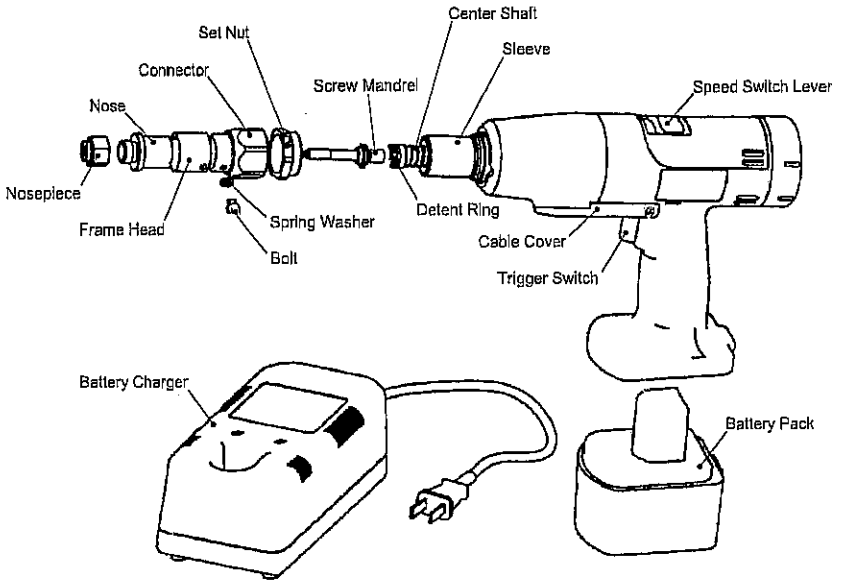

2.2 SPECIFICATION

Main body

Model Number	BN200
Power Source	12V DC
Nut Rivet Capacity	M3, M4, M5, M6, M8, M10 6-32, 8-32, 10, 1/4, 5/16, 3/8 Size and capacity depends on style of nut rivet. Check with company to determine specifics.
Nominal load (max.)	10.5kN
Weight (Battery pack excluded)	1.5kg (3.31 lbs.)
Dimensions (including battery pack)	70mm (W)×225mm (H)×310mm (L) (2.75 in. (W)×8.85 in. (H)×12.2 in. (L))

Battery Pack

Model Number	BP12G
Storage Battery	Ni-Cd Battery
Voltage	12V DC
Battery Capacity	1300mAh
Battery Life	Approx. 500 charges
Weight	0.6kg (1.32 lbs.)

POINT Specification and design of this product are subject to change without notice.

3. PREPARATION BEFORE USE

3.1 MAIN BODY

Replacement of Nosepiece and Screw Mandrel

According to the nut rivet size to be used, replace the nosepiece and/or screw mandrel.

POINT At the time of purchase, nosepiece for M6, and screw mandrel are attached.

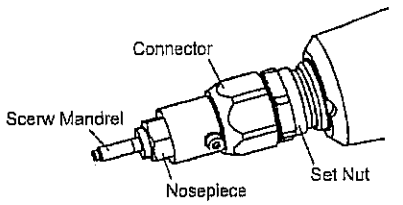

Replace them by the following step.

CAUTION At replacement, remove the battery pack.
Possible malfunction may damage the tool or cause injuries.

(1) By a spanner, remove nosepiece from the connector.

POINT The assembly nut rivet and connector are the left-hand screws. Be careful for the direction.

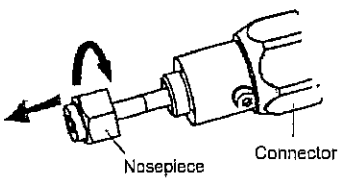

(2) By a spanner, loosen the connector and assembly nut rivet.

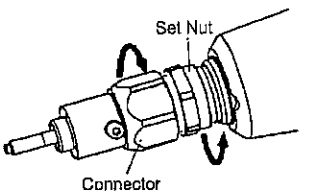

(3) Remove the connector.

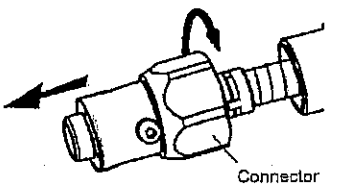

(4) Remove the screw mandrel.
Shift the detent ring backward, and remove the claw of the detent ring from cutout.

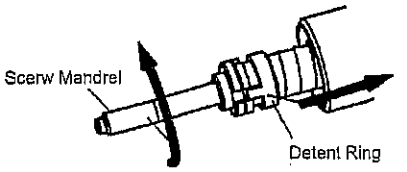

(5) Attach the screw mandrel for the nut rivet size to be used.

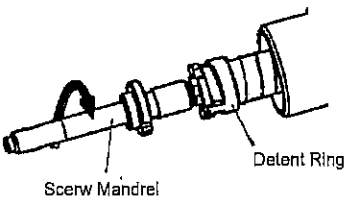

(6) Tighten the screw mandrel fully.

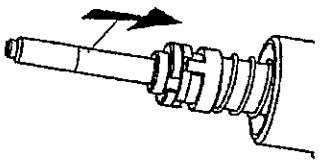

(7) Temporarily return the tightened screw mandrel to left, set the claw to the cutout part of detent ring to attach the screw mandrel.

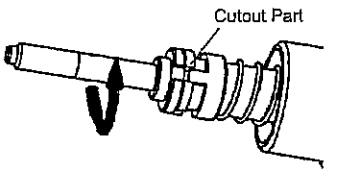

(8) Attach the connector.

(9) Attach the nosepiece for the nut rivet size to be used, and fully assemble it by a spanner.

Setting Rotation Speed

The rotation speed of the tool can be switched in two levels. To switch the speed level, shift the speed switch lever upward or backward. Normally use the tool at the position (LOW).

CAUTION

- During the motor rotation, do not switch the speed. Otherwise, the tool may malfunction.
- Assure the setting position of speed switch lever.

Improper setting may cause insufficient setting power even though the motor is rotated.

- When the speed switch lever is hard to set, first apply idling operation for a few seconds, and then repeat the setting of the lever.
- In using the tool with the speed position of (HIGH), be careful not to apply overload on the motor. When the tool temperature increases, immediately stop using the tool, cool the tool for a certain period of time, and then use the tool at the speed position (LOW).

Stroke Setting Adjustment

Set the stroke appropriately. When the stroke is too short, the nut rivet may be loose due to an insufficient setting. Also, an excessively long stroke setting may damage the screw thread.

Perform the stroke adjustment by the following step:

POINT The assembly nut rivet and connectors are the left-hand screws. Be careful for the direction.

(1) Using a spanner, remove the nosepiece from the connector.
(2) Using a spanner, loosen the connector and assembly nut rivet.
(3) Adjust the clearance C between the assembly nut rivet and the front flange appropriately according to the nut rivet as follows:
Clearance C = Proper setting + 1 mm

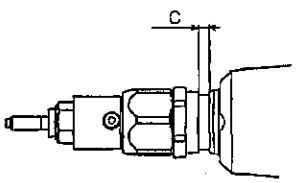

POINT

- For the proper setting, refer to "List of Setting Strength" in the "Instruction Manual for Lobtex Riveter" attached with the nut rivet.
- The clearance C is approximately the same dimension in mm that the connector is rotated away from the tool body.
- One full rotation of assembly nut rivet: 1 mm for Clearance C
- Two full rotations of assembly nut rivet: 2 mm for Clearance C

(4) Fix the assembly nut rivet by the connector.

(5) Perform the setting without material by the following step:

POINT The setting of a nut rivet without material.

1) Tighten the nut rivet on to the screw mandrel.

2) Attach the battery pack to the main unit.
3) Actuate the trigger.
4) The nut rivet is set and a clutch sound is heard at the end of the stroke.

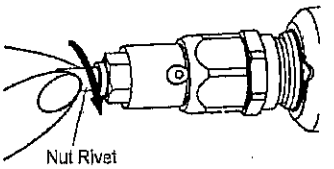

5) Confirm the clutch sound at the end of stroke is heard and pull the nut rivet with pliers.
6) By releasing the trigger, the screw mandrel reverses and removes itself from the nut rivet.

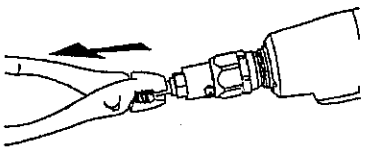

POINT Continuously pull the nut rivet until the nut rivet is completely removed.
Stopping the pulling action will stop the screw mandrel from reversing. When the nut rivet is hard to pull, try pushing the connector. It also helps the screw mandrel reverse.

(6) Perform "Fine Adjustment" by the following step.
1) Measure the dimensions of the rivet nut for the following two cases;
- when the setting is applied to the rivet nut without material
- when the setting is not applied to the rivet nut.

The gap between the above two dimensions (L) should be within the standard range.

2) If the gap (L) is out of the range, repeat the adjustment by the following step:
When the setting is insufficient:
Advance the connector (increase the clearance C) to increase the setting stroke.
When the setting is excessive:
Retract the connector (decrease the clearance C) to decrease the setting stroke.

(7) Perform the setting without material again, and confirm that the dimension gap (L) is within the standard range.

(8) By a spanner, turn the assembly nut rivet to right and tighten.

POINT Do not turn the connector. If it is turned, the adjustment position may be shifted, riquiring further adjustment.

3.2 BATTERY PACK

Charging Battery Pack

The battery pack is shipped from the factory already charged. However, it is naturally discharged. Charge the battery pack before using. Charge the battery pack only with the exclusive charger.

(1) Pull the battery pack in the direction shown in the illustration while pressing the push button of the battery pack to remove the battery pack from the main body.

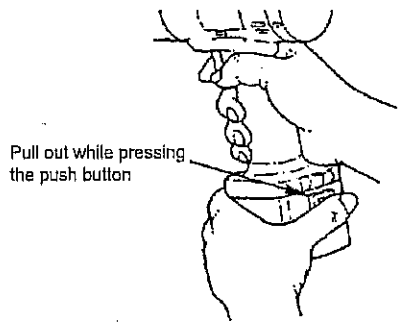

(2) Insert the plug of the charger in the power receptacle, and then fully insert the battery pack into the charger. The red lamp lights and charging is started. If both lamps do not light, malfunction of the battery pack is a possible cause. Refer to Section 6, "Indicator Descriptions of the Battery Charger".

(3) The charging circuit turns off automatically, and the green lamp goes on when completely charged. The standard charging time is 60 minutes, however, the charging time slightly changes according to the using condition and temperature. For the battery performance and temperature. For the battery performance and safety, charge the battery pack with the ambient temperature of 0℃ or higher and lower than 40℃. If the red lamp does not go off even if 180 minutes or more passed, malfunction may occur. Bring the charging tools to us or our sales representative.

(4) After completing the charging, take out the battery pack from the charger, and attach it to the cordless riveter firmly until a click sound is heard. Once completely charged, leave the charger 15 minutes or more before starting the next charging.

Life of the Battery Pack

The standard life of the battery pack is 500 times of charging/discharging. Alter the battery pack is completely charged, if the number of setting is extremely reduced to nearly half of the initial state, the life of the battery pack may be expired. Replace the battery pack with a new one.

4. HOW TO SET NUT RIVETS

Rivet the nut rivet according to the following step:

CAUTION Do not repeatedly set the nut rivet once the cycle is completed.
Additional setting may damage the screw thread of the nut rivet, shorten the tool lifetime, and/or cause malfunction.

(1) Prepare a hole in material as recommended by nut rivet manufacturer.

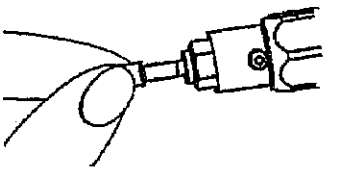

POINT For the detailed diameter of the preparation hole, refer to "Instruction Manual for Lobtex Riveter."

(2) Set the nut rivet to the tool.

1) Attach the screw mandrel at right angles with the nut rivet.

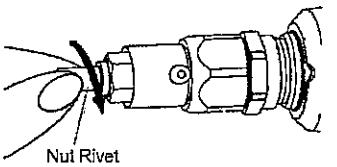

POINT Slightly lubricate the threaded part of screw mandrel.
It assures the smooth screw-in of nut rivet.

2) Pull the trigger.
   - The screw mandrel starts rotation and the nut rivet is screwed into the mandrel.
3) Stop pressure on the trigger prior to nut rivet making contact with nosepiece.
4) Manually tighten nut rivet to nosepiece to fully screw into the screw mandrel.

(3) Place the mandrel with nut rivet attached in to prepared hole of material.

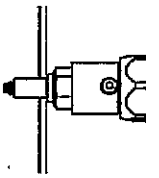

POINT Push the rivet head so that the nut rivet is flush with the material.

(4) Pull the trigger to activate the tool.
- The clutch sound at the stroke end is heard and the nut rivet is set to the material.

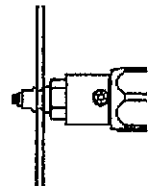

(5) Releasing finger from trigger stops the tool.

(6) Remove the tool.

1) Confirm that the tool is completely stopped before removing the tool.

POINT The removing operation before the motor stops can worsen the contact abrasion of the switch due to CM relay welding, causing the tool malfunction.

2) While pushing forward pressure on the connector, pull back from the material.
- The screw mandrel automatically starts in reverse rotation, and the screw mandrel removes itself from the nut rivet.

POINT Keep pulling the main unit until the screw mandrel is completely removed from the nut rivet.

3) Confirm that the screw mandrel is completely removed from the nut rivet.

5. CLEANING AND MAINTENANCE

Setting for a long time generates chips and dust at several parts, which causes malfunctions. The tool needs periodical cleaning and maintenance according to this manual.

⚠ WARNING Before starting the cleaning and maintenance of the tool, be sure to remove the battery pack. Otherwise an unexpected movement of the tool may cause damages of the tool or injuries of operators.

CAUTION All parts must be completely assembled and all fastening areas must be fastened.

5.1 LUBRICATION OF THE SCREW

Lubricate the threaded tip of the screw mandrel.
This allows a smooth release of the screw mandrel from the nut rivet, and extends the life of the screw mandrel.

- Lubrication frequency: one lublication/10 to 20 setting times
- Recommended oil: Lobtex Lubrication Oil (optionally available)

5.2 REPLACING CM RELAY

A malfunction such as "Reversed rotation does not stop" or "No reversed rotation is available" may be caused by welding due to contact abrasion of the CM relay. When this happens, stop the use immediately and ask us for repair.

6. TROUBLESHOOTING

When any breakage is suspected, try following procedures. If the following procedures cannot solve the problem, consult or ask repair to us.

Malfunction	Possible cause	Suggested Remedy
Screw mandrel does not rotate.	Stroke has not completed.	Pull out the connector part and let the mandrel rotate in reverse.
Screw mandrel rivets the nut rivet by normal rotation. (It does not move for retraction.)	Either of the followings is suspected: 1. A large load has occurred at the reverse rotation in the previous work (removal of the nut rivet). 2. The nut rivet has been mistakenly set twice. 3. Nosepiece of other manufacturer has been used.	Hold the screw mandrel with pliers and pull the trigger. (when the screw mandrel is pulled in and the clutch sound is heard, the reset is completed)
Clutch does not work.		
The motor does not rotate.	Battery pack needs to be charged.	Charge the battery pack.
	Foreign substance is adhered between the battery pack and the main unit.	Remove the foreign substance.
The motor does not rotate even though it sounds like rotating.	The stroke adjustment for the nut rivet is adjusted incorrectly..	Adjust the stroke again.
	Screw mandrel is broken.	Replace the screw mandrel. Refer to the description in "Preparation."
Motor does not stop.	CM relay is abraded away.	Remove the battery pack from the main unit, and ask for repair. Refer to "Maintenance."
The screw mandrel does not get into the nut rivet smoothly.	Screw thread of the screw mandrel is damaged.	Replace the screw mandrel.
	Screw thread of the nut rivet is damaged.	Replace the nut rivet.
When the battery pack is fully charged, less than half numbers of the nut rivet (compared to the purchased condition) can be riveted.	The battery pack comes to the end of its lifetime.	Purchase a new battery pack and replace it with the old one.

7. PART DRAWINGS

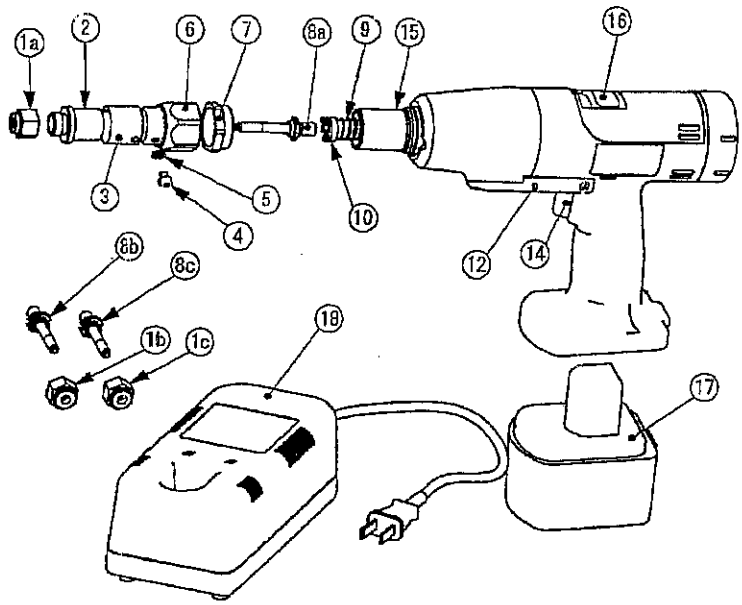

No.	Part Name	Part No.	No.	Part Name	Part No.
1-a	Nosepiece M6	15618	8-b	Screw Mandrel M4	12893
1-b	Nosepiece M4	15464	8-c	Screw Mandrel M5	12894
1-c	Nosepiece M5	15480	9	Center Shaft	---
2	Nose	12898	10	Detent Ring	---
3	Safety Cover	12899	12	Cable Cover	---
4	Bolt M4×5	12901	14	Trigger Switch	---
5	Spring Washer (for M4)	15667	15	Sleeve	---
6	Connector	40435	16	Speed Switch Lever	---
7	Set Nut	40434	17	Battery pack BP12G	6907
8-a	Screw Mandrel M6	12895	18	Battery Charger	6903

■ STORAGE

◎ This tool must be stored in less dust, less humid and drafty place on solid floor.

◎ After use, store the tool to a dry place free from children.
When the tool is not used for a long period of time or when it is contained in a blow case, remove the battery pack from the main unit.

⚠ CAUTION To avoid short circuit, be sure to attach a cap to the terminal part of the removed battery pack or apply an insulation tape.

◎ To use the tool longer, we recommend you to request us overhaul service periodically. (Overhaul is not a free-of-charge service) Consult the store you purchased this tool or Lobtex local sales office about overhaul service and other maintenance service.

◎ When the battery pack is not used for a long time (six months or more), store it in the place 35℃ or lower. After strong for a long time, 4 to 5 times of charging/discharging recover the capacity. (If the battery pack is left without using for a long time, capability may be lowered temporarily.)

POINT The Ni-Cd battery is used for this product. Ni-Cd batteries are recyclable precious resources. When disposing of the used product, return the battery pack as it is to us or our sales representative.

■ ORDERING PARTS

Clearly identify the model No, part No, and quantity in the order sheet, and submit it to the store you purchased this tool or directly to Lobtex local sales office. (You may refer "7 Part drawing.")

Model No.	Part No.	Part name	Q'ty
BN200	12899	Safety Cover	1 set
BN200	15464	Nose Piece M4	1 set

Even when the part is improved, the inventory of the previous part will be available for 5 years.

LOBTEX CO.,LTD.

LOBTEX URL http://www.riveter.com

9-10,Hyotan-yama-cho,Higashi-Osaka City
Osaka 579-8051, Japan

Telephone : +81(729)81-7466 Telefacs : +81(729)81-9420
e-mail : lobtex@riveter.com

OCT.2003