EXPLODED VIEW
AN-200

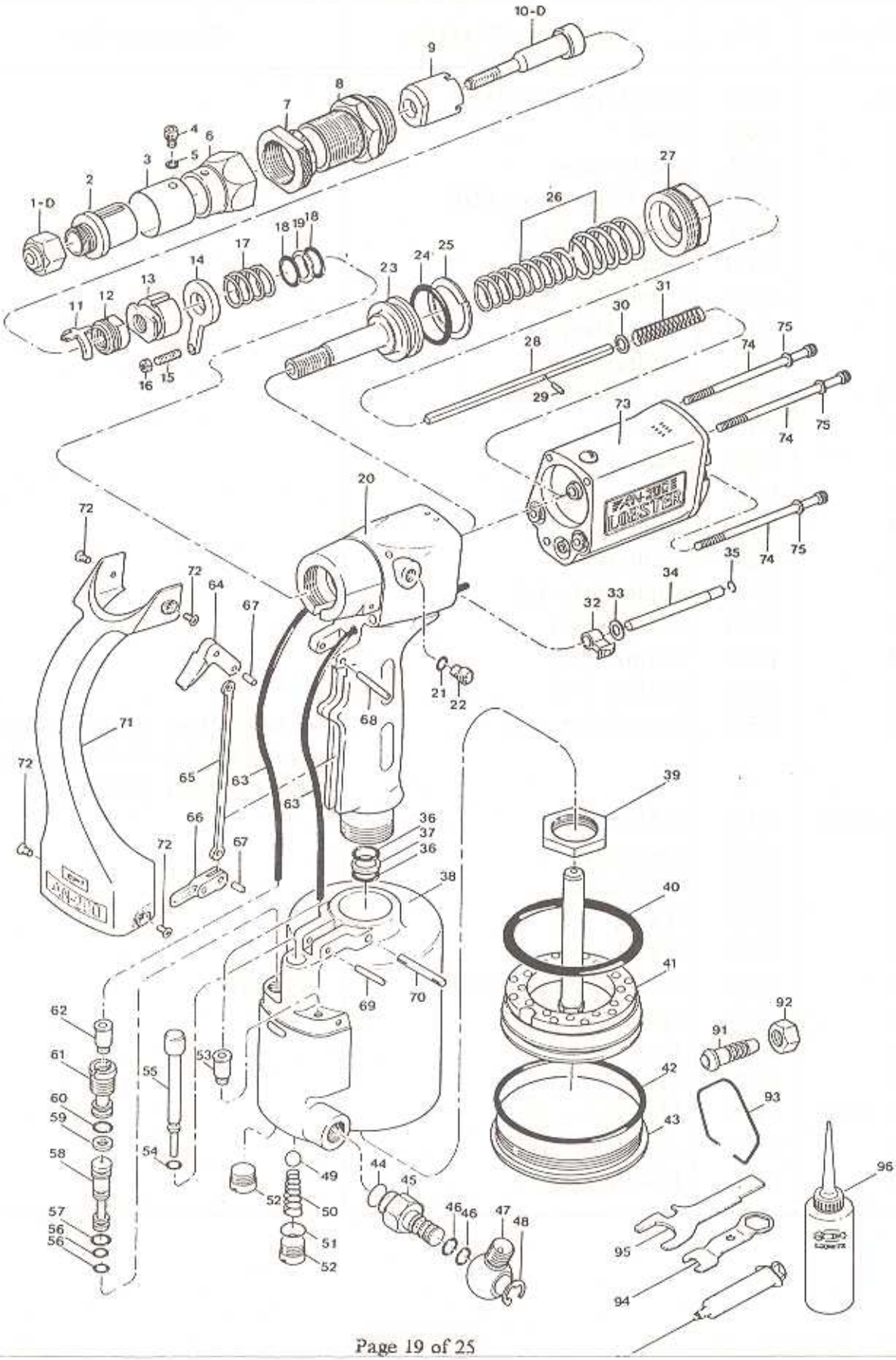

MOTOR ASSEMBLY
EXPLODED VIEW

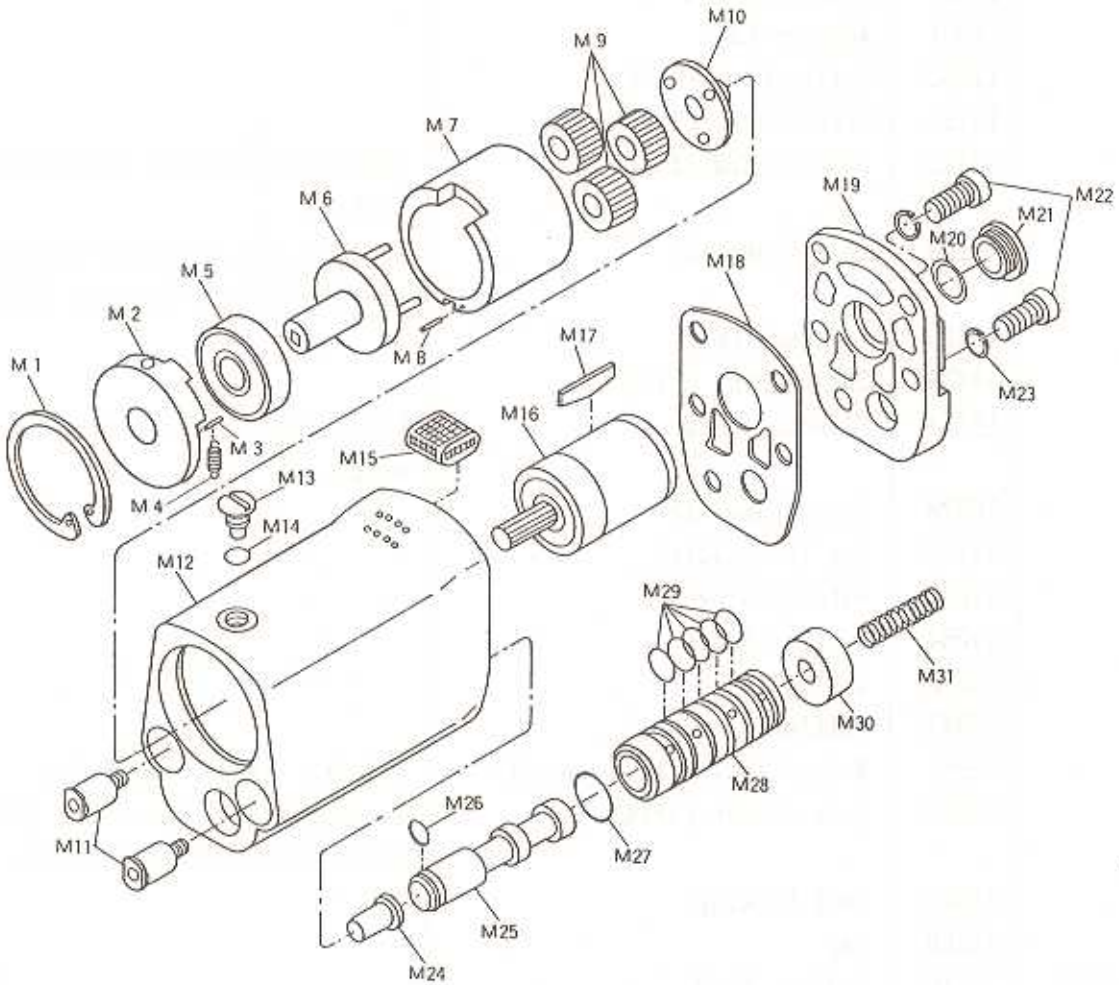

MOTOR ASSEMBLY
PARTS LIST

Index No.	Code	Parts Names	Remarks
M01	17068	Snap Ring #34	
M02	17051	Adaptor Cap	
M03	11932	Spring Pin 2 x 8	
M04	14728	Clutch Returning Spring	
M05	16452	Bearing 629 ZZ	Separated from old Gear Frame <2> Unit.
M06	16136	Gear Frame <2>	No unit, not includes planetary gear(16733) nor bearing (16452).
M07	16325	Internal Gear	
M08	14438	Spring Pin 2 x10	
M09	16733	Planetary Gear	Loose gear, needs 3 pcs in one motor.
M10	16829	Gear Frame <1>	
M11	14848	One Touch Joint	
M12	17057	Motor Casing	
M13	17064	Setting Screw	
M14	10276	O-Ring S- 5	
M15	16847	Muffler	
M16	16851	Motor (including 5 vanes)	5 Vanes (14015) built-in.
M17	14015	Vane (inner parts)	Inner parts of the Motor (16851), needs 5 vanes in one motor.
M18	16855	Seal Packing	
M19	16859	Cap	
M20 orM29	10219	O-Ring P- 9	
M21	16665	Motor Cap	
M22	16863	Hex Indent Head Bolt (4x10)	
M23	15667	Spring Washer M4 (black)	
M24	16867	Changer Pin	
M25	16871	Spool <2>	
M26	10149	O-Ring P- 7	
M27	10152	O-Ring S-14	
M28	16875	Attachment	
M30	14537	Spool Stopper	
M31	16826	Spool Returning Spring	

Index No.	Code	Parts Names
001D	15618	Nose Piece (Anvil) M6
002	12898	Nose
003	12899	Safety Cover
004	12901	Hex Indent Screw M4x6
005	15409	Spring Washer M4
006	17112	Connector
007	17108	Stroke Set Nut
008	17104	Front Flange
009	15692	Mandrel Case
010D	15635	Screw Mandrel M6
011	17100	Stop Ring
012	17096	Adaptor
013	17092	Adaptor Lock Nut
014	15955	Guide
015	15680	Guide Screw
016	15732	Guide Screw Nut
017	15841	Guide Spring
018	10128	O-Ring P-12
019	10129	B-Ring P-12
020	15453	Loose Frame only
021 or056	12120	O-Ring P- 5
022	12135	Bleed Plug
023	17077	Oil Piston
024	12437	O-Ring P-26
025	12438	B-Ring P-26
026	16623	Return Spring Set (A+B)
027	17088	Frame Cap
028	15817	Conveyer Rod
029	16101	Spring Pin 1.2x 8
030 or033	14642	Flat Washer M5
031	10133	Jaw Pusher Spring
032	15744	Reverse Lever

Index No.	Code	Parts Names
034	15768	Guide Pin
035	15800	Retaining Ring E-3.2
036	10337	O-Ring P-10A
037	16030	B-Ring P-10A
038	15869	Air Cylinder
039	10112	Frame Lock Nut
040	10134	O-Ring P-60
041	14798	Air Piston Unit with Bumper
042	10080	O-Ring G-70
043	15276	Air Cylinder Cap
044	10151	O-Ring S-10
045	12130	Double Male Connector
046or057 or060 orM26	10149	O-Ring P- 7
047	10294	Rotary Joint
048	10285	Retaining Ring E-7
049	14239	Valve (urethane ball)
050	14255	Valve Spring
051	14475	O-Ring S- 8
052	14294	End Plug
053or062 orM11	14848	One Touch Joint
054	10454	O-Ring P- 4
055	14172	Valve Pusher
058	14513	Spool
059	14818	Packing
061	14767	Pilot Holder
063	15611	Air Pipe
064	14375	Trigger
065	10202	Trigger Connector Rod
066	10282	Trigger Lever
067	10147	Spring Pin 3 x 6
068	10251	Spring Pin 3 x20

Index No.	Code	Parts Names	Remarks
069	10145	Spring Pin 3 x18	
070	14154	Slotted Pin 4 x 31	
071	17042	Grip Cover	
072	15645	C-Screw M3	
073	17031	Air Motor Assembly	
074	15435	Hex Indent Screw M4x90	
075 orM23	15667	Spring Washer M4 (black)	
091	10140	Air Hose Joint 1/4	
092	10139	Air Hose Joint Nut 1/4	
093	15468	Hanger	
094	10141	Spanner 'A'	
095	14036	Spanner 'B'	
096	10012	Hydraulic Oil	
097	14142	Priming Pump (injector)	

RECOMMENDED SPARES IN KITS

Index No.	Code	Parts Names	Remarks
100-Metric	16581	Thread Conversion Kit M3-10	16830+16834+14700+16328 +16537 +16542.
101	16268	Trigger Assembly	10147x2+10202+10282+14375.
102	14823	Air Piston Assembly	10134+14798.
103	17082	Oil Piston Assembly	12437+12438+17077.
104	15837	Frame unit (with O-/B-Rings)	10128x2+10129+10337x2 +15453 +16030, but without bleed plug nor O-ring.
110	16549	Auxiliary Tool Kit	10139+10140+10141+14036 +15468.
112	14267	Rotary Joint Assembly	10149x2+10151+10285+10294 +12130.