AR-011P(B)

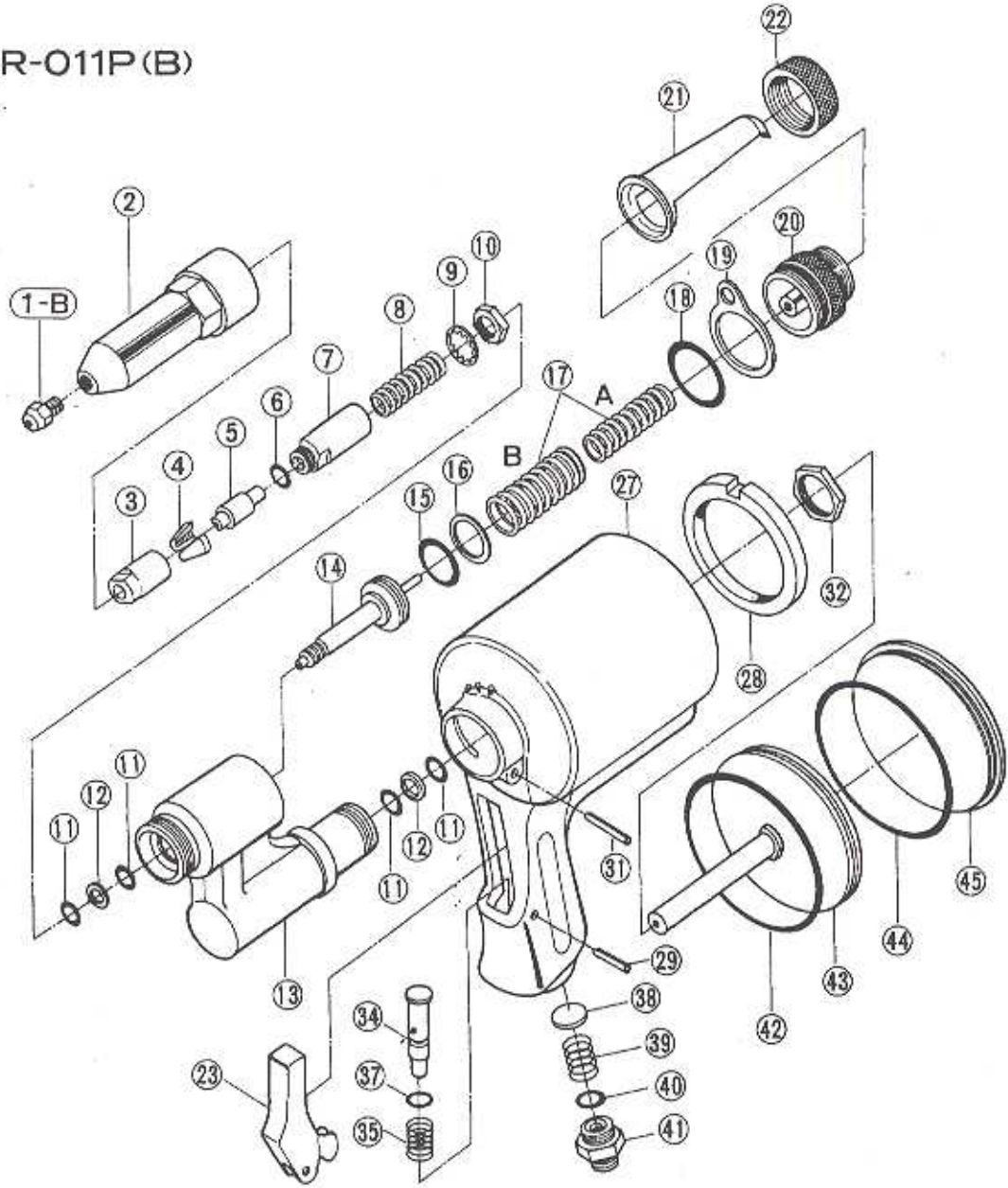
22
21
2
20
19
10
9
1-B
8
18
7
17
A
6
5
B
4
16
3
15
27
14
32
28
11
12
11
12
11
11
31
45
44
29
43
13
38
42
34
39
23
37
40
35
41

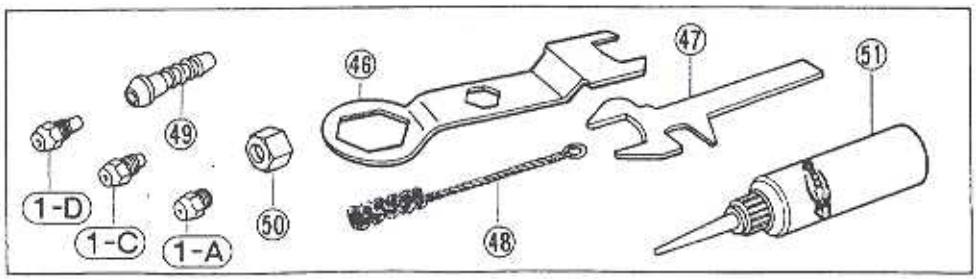
46
47
51
49
1-D
1-C
1-A
50
48

AR-011P(B) PARTS LIST

INDEX NO	CODE	PART-NAME
01	14450	Set of 4 Nose Pieces
01A	10027	Nose Piece (S) 2.4(3/32)
01B	10028	Nose Piece (S) 3.2(1/8)
01C	10029	Nose Piece (S) 4.0(5/32)
01D	10030	Nose Piece (S) 4.8(3/16)
02	10105	Frame Head
03	10116	Jaw Case Haed
04	10117	Jaw (set) 'M'
05	10132	Jaw Pusher
06	10151	O-Ring S-10
07	10115	Jaw Case
08	10133	Jaw Pusher Spring
09	10148	Lock Washer A-7/16
10	10113	Jaw Case Lock Nut
11	10128	O-Ring P-12
12	10129	B-Ring P-12
13U	10079	Frame Unit (includes 11 & 12)
14	10109	Oil Piston
15	10130	O-Ring P-22A
16	10131	B-Ring P-22A
17	14200	Return Spring A+B (set)
17A	10110	Return Spring A (inner)
17B	10111	Return Spring B (outer)
18	10153	O-Ring S-26
19	10106	Hanger Clip
20	10104	Frame Cap
21	10082	Safety Cap (Standard)
22	10108	Safety Cap Nut
23	10230	Trigger
27	10081	Air Cylinder (with Bumper)
28	10114	Bumper (Rubber Cushion)
29	10233	Spring Pin 3 ×30
31	14154	Slotted Pin 4 ×31
32	10112	Frame Lock Nut
34	10231	Valve Pusher
35	10232	Valve Pusher Spring
37	10220	O-Ring S-6

INDEX MO.	CODE	PART-NAME
38	10125	Valve (Disc)
39	10126	Valve Spring
40	10152	O-Ring S-14
41	10127	Nipple (3/8-1/4)
42	10134	O-Ring P-60
43	14168	Air Piston Unit
44	10080	O-Ring G-70
45	10011	Air Cylinder Cap
46	10141	Spanner 'A'
47	10142	Spanner 'B'
48	10143	Cleaning Brush
49	10140	Air Hose Joint 1/4
50	10139	Air Hose Joint Nut 1/4
51	10012	Hydraulic Oil