AR-011S

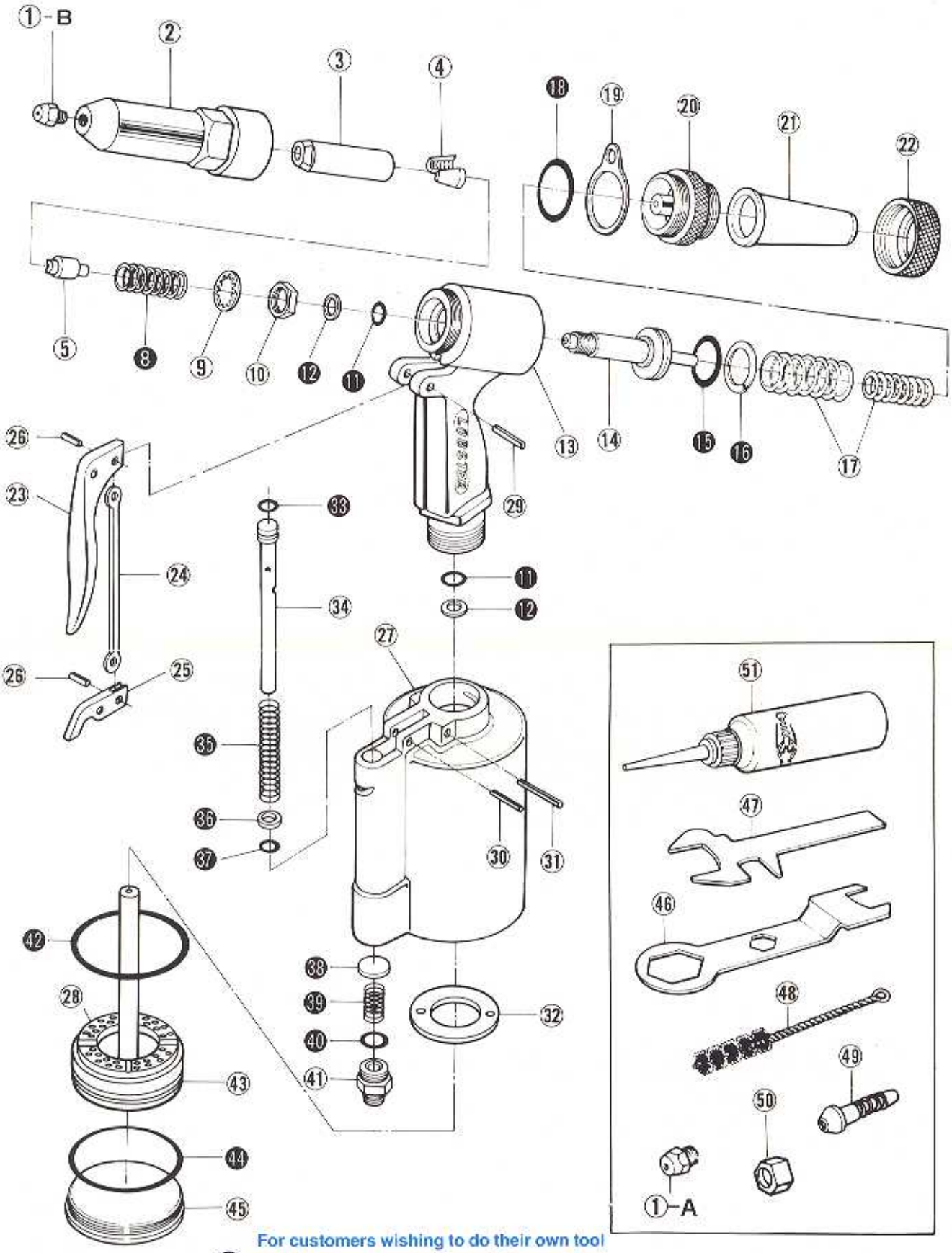
①-B
②
③
④
⑱
⑲
⑳
㉑
㉒
⑤
⑧
⑨
⑩
⑫
⑪
⑬
⑭
⑮
⑯
⑰
㉖
㉓
㉔
㉙
㉝
㉞
㉗
㉕
㉟
㊱
㊲
㉚
㉛
㊷
㉘
㊸
㊹
㊺
㊳
㊴
㊵
㊶
㉜
㊶
㊶
㊶

AR-011S(B) PARTS LIST

INDEX NO	CODE	PART-NAME
01A	10027	Nose Piece (S) 2.4(3/32)
01B	10028	Nose Piece (S) 3.2(1/8)
02	10170	Frame Head
03	10173	Jaw Case
04	10032	Jaws (set) 'S'
05	10132	Jaw Pusher
08	10133	Jaw Pusher Spring
09	10148	Lock Washer A-7/16
10	10113	Jaw Case Lock Nut
11	10128	O-Ring P-12
12	10129	B-Ring P-12
13	14026	Frame only
14	10171	Oil Piston
15	10180	O-Ring P-22
16	10181	B-Ring P-22
17	14200	Return Spring A+B (set)
17A	10110	Return Spring A (inner)
17B	10111	Return Spring B (outer)
18	10185	O-Ring S-24
19	10106	Hanger Clip
20	10169	Frame Cap
21	10015	Safety Cap (standard) (blue)
22	10108	Safety Cap Nut
23	16363	Trigger (long)
24	10120	Trigger Connector Rod
25	10175	Trigger Lever
26	10147	Spring Pin 3 × 6
27	14065	Air Cylinder
28	10172	Bumper (Rubber Cushion)
29	10144	Spring Pin 3 ×22
30	10145	Spring Pin 3 ×18
31	14154	Slotted Pin 4 ×31
32	10348	Frame Lock Nut
33	10149	O-Ring P-7
34	14090	Valve Pusher
35	10179	Valve Pusher Spring
36	10154	Collar for Valve Pusher
37	10150	O-Ring P-6
38	10125	Valve (Disc)
39	10126	Valve Spring
40	10152	O-Ring S-14
41	10127	Nipple (3/8-1/4)
42	82	O-Ring P-44

AR-011S(B) PARTS LIST

INDEX NO.	CODE	PART-NAME
43	14342	Air Piston Unit (w/bumper)
44	10421	O-Ring G-50
45	10018	Air Cylinder Cap
46	10183	Spanner 'A'
47	10142	Spanner 'B'
48	10143	Cleaning Brush
49	10140	Air Hose Joint 1/4
50	10139	Air Hoes Joint Nut 1/4
51	10012	Hydraulic Oil (150cc in a bottle)

RECOMMENDED SPARES IN KITS

INDEX NO.	CODE	PART-NAME
100	16048	Auxiliary & Accessory Kit (includes nos. 1A,1B,4,46,47,48,49,50&51)
101LT	15919	Long Trigger Assembly (includes nos. 23,24,25,26-2pcs.,29&30)
102	14330	Air Piston Assembly (includes nos. 28,42&43)
103	14144	Oil Piston Assembly (includes nos. 14,15&16)
104	14029	Frame Assembly (includes nos. 13,11-2pcs.,&12-2pcs.)
105	16307	Hydraulic Seal Kit (includes nos. 18,11-2pcs.,&12-2pcs.)
106	16323	Piston Seal Kit (includes nos. 15,16,42&44)
107	16336	Valve Seal Kit (includes nos. 33,36,37&40)
108	16340	Light Springs & Valve Kit (includes nos. 8,35,39&38)
109	16344	Maintenance Kit (complete set of 105,106,107&108)
110	16214	Auxiliary Tool Kit (includes nos. 1A,4,46,47,48,49&50)
	02431	Jaw Lube (50cc in a bottle)