EXPLODE VIEW AR-021EXH

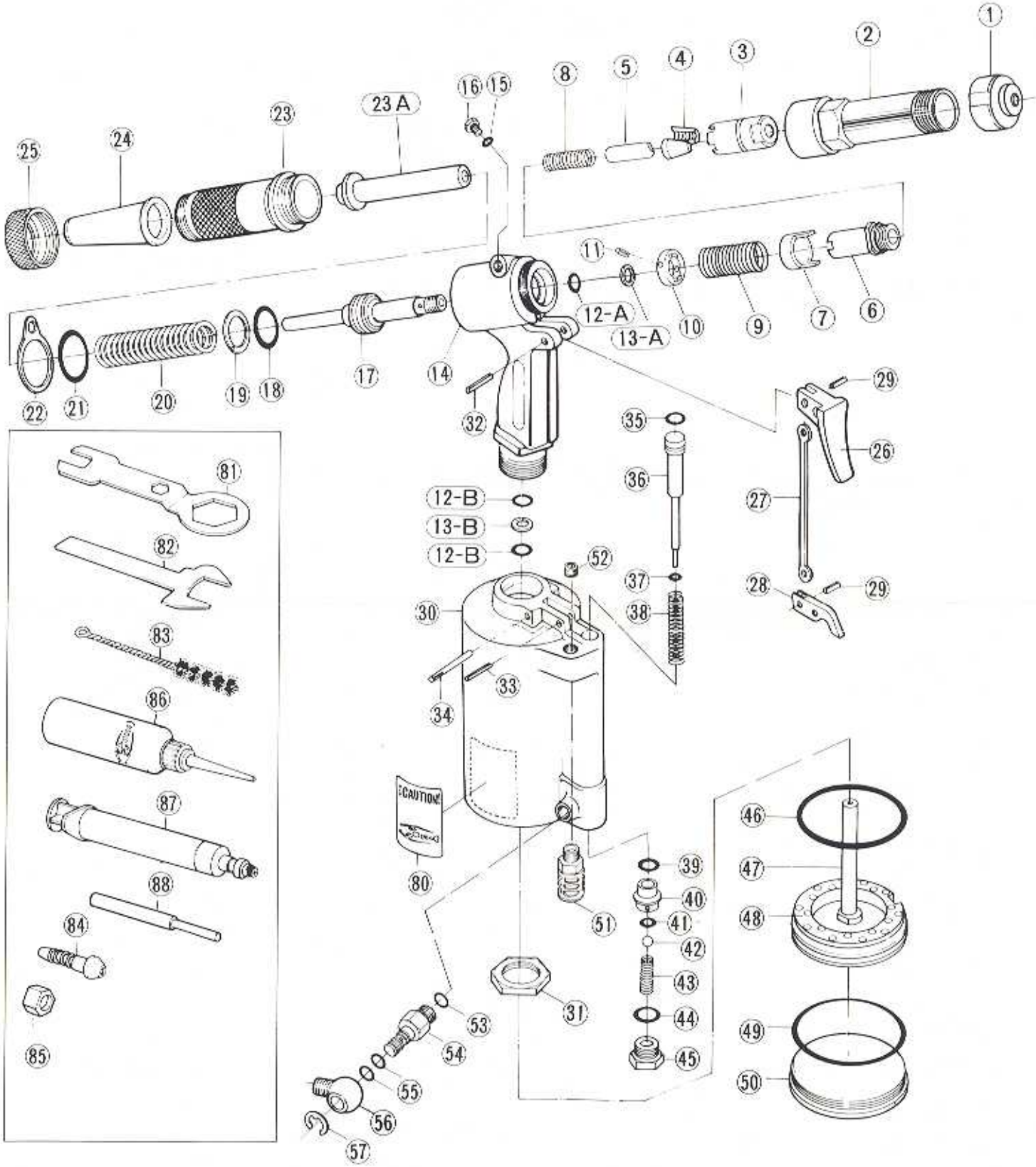

INDEX NO	CODE NO	PART NAME
01	15937	Nose Piece (nose assembly) for Magna-Lok® (1/4, 6.4mm)
02	15925	Frame Head
03	10447	Jaw Case Head (H)
04	10493	Ultra Jaws (H) (pair)
05	10224	Jaw Pusher (H)
06	12167	Jaw Case
07	10446	Collar for Jaw Case
08	10210	Jaw Pusher Spring
09	10449	Collar Spring
10	12176	Retainer Collar
11	10147	Spring Pin (3×6mm)
12A	10434	O-Ring P-14
13A	10435	Back-up Ring P-14
12B	12193	O-Ring P-12.5
13B	12194	Back-up Ring P-12.5
14U	15940	Frame Unit (includes 12 & 13)
15	12120	O-Ring P-5
16	12135	Bleed Plug
17	12166	Oil Piston
18	10207	O-Ring P−24
19	10208	Back-up Ring P-24
20	10438	Return Spring
21	10221	O-Ring S-28
22	15917	Hanger Clip (black)
23	15960	Frame Cap (black)
23A	12174	Frame Cap Sleeve
24	14051	Deflector (Safety Cap)
25	15945	Safety Cap Nut (black)
26	10135	Trigger, Short
27	10202	Connector
28	10450	Trigger Lever

INDEX NO	CODE NO	PARTS NAME
29	10147	Spring Pin (3×6mm)
30	14462	Air Cylinder only
31	10425	Frame Lock Nut
32	10144	Spring Pin (3×22mm)
33	10145	Spring Pin (3×18mm)
34	14154	Slotted Pin (4×31mm)
35	10219	O-Ring P-9
36	10442	Valve Pusher
37	12120	O-Ring P-5
38	10453	Valve Pusher Spring
39	10274	O-Ring P-10
40	10441	Valve Sleeve
41	12120	O-Ring P-5
42	10247	Valve (Steel Ball 8.0mm)
43	10444	Valve Spring
44	10152	O-Ring S-14
45	10440	End Plug
46	10452	O-Ring P-85
47	14276	Air Piston Unit (includes 48 Bumper)
48	10114	Bumper (Rubber Cushion)
49	10445	O-Ring G-95
50	10427	Air Cylinder Cap
51	14355	Air Silencer
52	14359	Air Silencer Plug
53	10151	O-Ring S-10
54	12130	Double Male Connector
55	10149	O-Ring P-7
56	10294	Hinged (Rotary) Joint
57	10285	E-type Retaining Ring E-7
80	15905	Decal, Caution
81	12136	Spanner 'A'

PARTS LIST

INDEX NO	CODE NO	PARTS NAME
82	10218	Spanner 'B'
83	10143	Cleaning Brush
84	10140	Air Hose Joint 1/4
85	10139	Air Hose Joint Nut 1/4
86	10012	Hydraulic Oil (Bottle)
87	14142	Priming Pump (injector)
88	12175	Punch Out Key