EXPLODE VIEW AR-021M

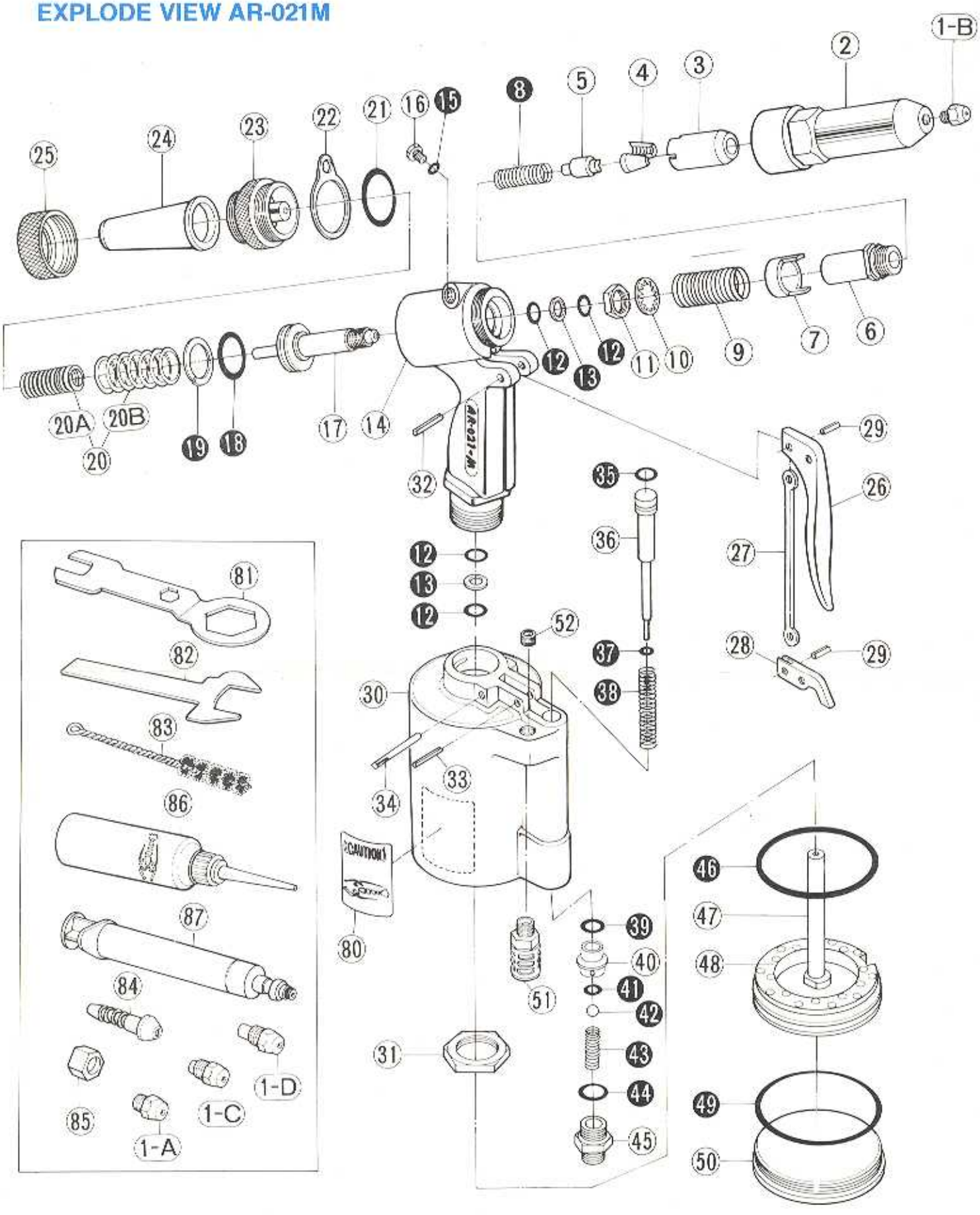

INDEX NO.	CODE NO.	PARTS NAME
01-A	10027	NOSE PIECE(S) 2.4 (3/32")
01-B	10028	NOSE PIECE(S) 3.2 (1/8")
01-C	10029	NOSE PIECE(S) 4.0 (5/32")
01-D	10030	NOSE PIECE(S) 4.8 (3/16")
01	14450	SET OF 4 NOSE PIECES INCLUDES 01-A, -B, -C, & -D
02	10105	FRAME HEAD
03	10280	JAW CASE HEAD
04	10281	PAIR OF ULTRA JAWS (M)
05	10132	JAW PUSHER
06	10279	JAW CASE
07	10286	COLLAR FOR JAW CASE
08	10133	JAW PUSHER SPRING
09	10287	COLLAR SPRING
10	10148	LOCK WASHER
11	10113	JAW CASE LOCK NUT
12	10128	O-RING P-12
13	10129	BACK UP RING P-12
14	14430	FRAME ONLY
15	12120	O-RING P-5
16	12135	BLEED PLUG
17	10109	OIL PISTON
18	10130	O-RING P-22A
19	10131	BACK UP RING P-22A
20A	10110	RETURN SPRING A (INNER)
20B	10111	RETURN SPRING B (OUTER)
20	14200	RETURN SPRING A+B (SET)
21	10153	O-RING S-26

INDEX NO.	CODE NO.	PARTS NAME
22	10106	HANGER CLIP
23	10104	FRAME CAP
24	10137	SAFETY CAP
25	10108	SAFETY CAP NUT
26	13121	TRIGGER, LONG
27	10120	CONNECTOR
28	10119	TRIGGER LEVER
29	10147	SPRING PIN 3×6
30	14347	AIR CYLINDER
31	10112	FRAME LOCK NUT
32	10144	SPRING PIN 3×22
33	10145	SPRING PIN 3×18
34	14154	SLOTTED PIN 4×31
35	10149	O-RING P-7
36	12121	VALVE PUSHER
37	10454	O-RING P-4
38	12132	VALVE PUSHER SPRING
39	10274	O-RING P-10
40	10491	VALVE SLEEVE
41	12120	O-RING P-5
42	10247	VALVE (STEEL BALL 8.0)
43	10444	VALVE SPRING
44	10152	O-RING S-14
45	10127	NIPPLE 3/8-1/4
46	10134	O-RING P-60
47	14218	AIR PISTON UNIT (INCLUDES 48 BUMPER)
48	10114	BUMPER (RUBBER CUSHION)

PARTS LIST

INDEX NO.	CODE NO.	PARTS NAME
49	10080	O-RING G-70
50	14056	AIR CYLINDER CAP
51	14355	SILENCER
52	14359	PLUG
80		DECAL, CAUTION
81	14015	SPANNER A
82	10218	SPANNER B
83	10143	CLEANING BRUSH
84	10140	AIR HOSE JOINT 1/4
85	10139	AIR HOSE JOINT NUT 1/4
86	10012	HYDRAULIC OIL
87	14142	PRIMING PUMP

RECOMMENDED SPARES IN KITS

INDEX NO.	CODE NO.	PARTS NAME
100	14389	AUXILIARY & ACCESSORY KIT (INCLUDES NOS.1, 81, 82, 83, 84, 85, 86, & 87.)
101	14457	TRIGGER ASSEMBLY (INCLUDES 26, 27, 28, 29-2PCS., 32, & 33.)
102	14222	AIR PISTON ASSEMBLY (INCLUDES 46, 47 & 48)
103	14148	OIL PISTON ASSEMBLY (INCLUDES 17, 18 & 19)
104	14397	FRAME ASSEMBLY (INCLUDES 14, 12-4PCS., 13-2PCS., 15 & 16.)
105	14402	HYDRAULIC SEAL KIT (INCLUDES 21, 12-4PCS., 13-2PCS., & 15.)
106	14407	PISTON SEAL KIT (INCLUDES 18, 19, 46, & 49.)
107	14413	VALVE SEAL KIT (INCLUDES 35, 37, 39, 41, & 44.)
108	14418	LIGHT SPRINGS & VALVE KIT (INCLUDES 8, 38, 43, & 42.)
109	14422	MAINTENANCE KIT (COMPLETE SET OF 105, 106, 107, & 108.)
110	14050	AUXILIARY TOOL KIT (INCLUDES 1A, 1C, 1D, 81, 82, 83, 84, 85.)