AR2000H(A) PARTS TABLE

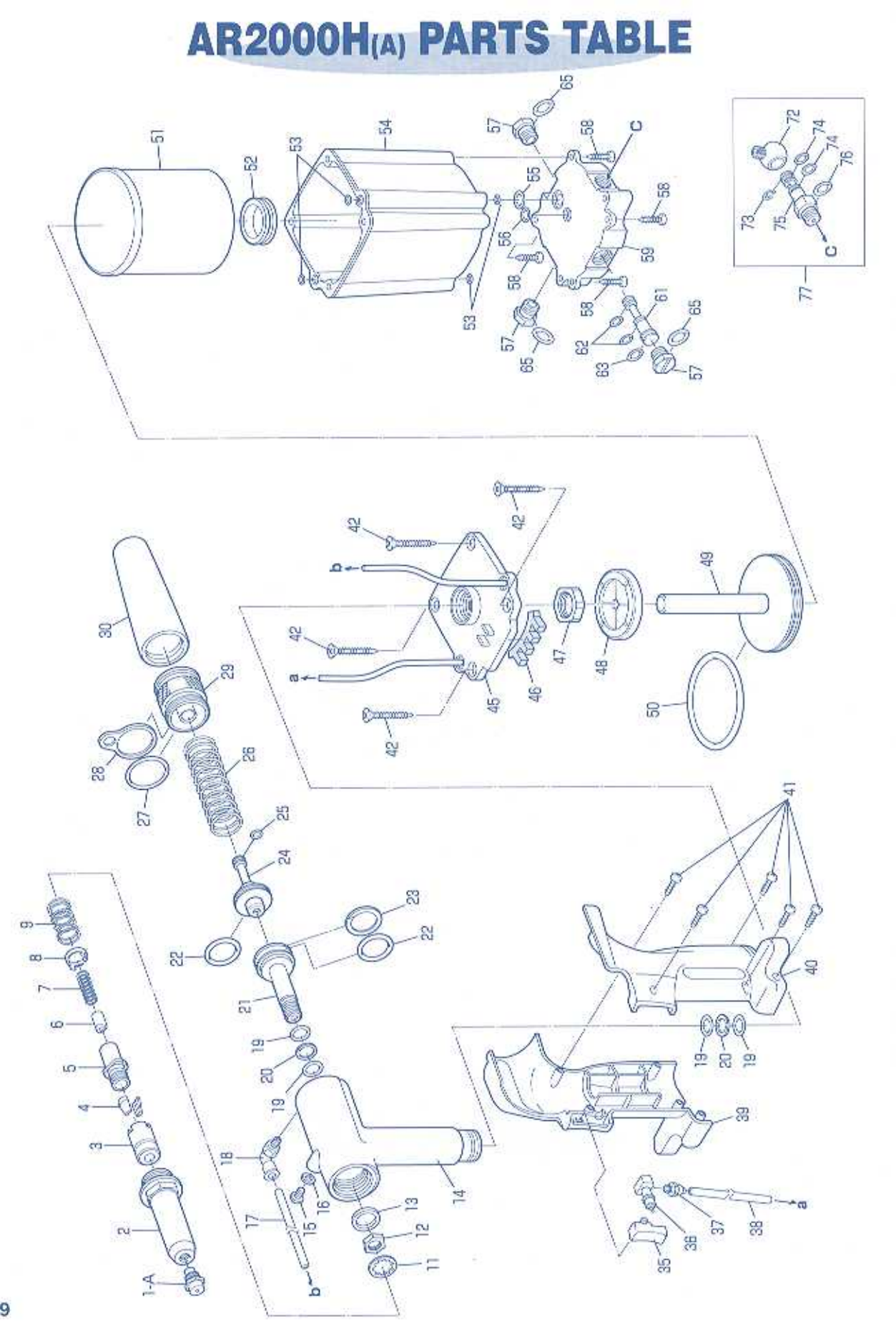

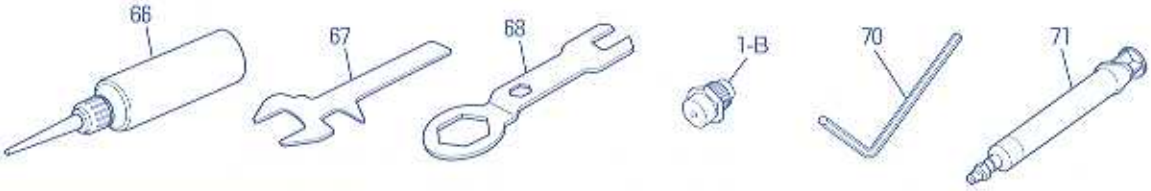

Index No.	Part name	Code No.	Index No.	Part name	Code No.
1－A	Nosepiece 'L' 4.8 (3/16)	10216	39	Frame cover 'HA-R'	44551
1－B	Nosepiece 'H' 6.4 (1/4)	10226	40	Frame cover 'HA-L'	44552
2	Frame head 'H'	29709	41	Pan head tapping screw 3×10	29340
③	Jaw case head 'H'	10447	42	Flat head tapping screw 5×35	29367
④	Ultra jaws (pair) 'H'	10493	45*'	Cylinder top	43586
⑤	Jaw case	10429	46	Muffler 'HA'	44567
⑥	Jaw pusher 'H'	29710	47	Frame lock nut 'H'	29757
⑦	Jaw pusher spring 'H'	29711	48	Rubber cushion 'H'	29736
8	Jaw case collar	10448	49	Air piston unit 'H'	29758
9	Collar spring	10449	50	O-ring P-70	10212
11	Lock washer	10148	51	Cylinder cup 'H'	29741
12	Jaw case lock nut 'H'	29712	52	Grommet	29361
13	Stop ring	23634	53	O-ring S-5	10276
14*'	Frame unit 'HA'	44703	54	Cylinder cover 'H'	29740
15	Bleed plug (Hexagon socket head cap screw)	29337	55	O-ring P-10	10274
16	Pack seal 6 mm	10355	56	O-ring P-7	10149
17	Polyurethane tube 230 mm	29730	57	Change plug	29735
18	Connector	29354	58	Pan head tapping screw 4×20	29610
19	O-ring P-12	10128	59	Cylinder bottom 'H'	29739
20	B-ring P-12	10129	61	Spool	29612
21	Oil piston 'Z'	41270	62	O-ring P-5 (4D)	29613
22	O-ring P-24	10207	63	O-ring P-8 (4D)	29614
23	B-ring P-24	10208	65	O-ring P-9	10219
24	Back piston 'Z'	41273	66	"LOBSTER" brand hydraulic oil	10012
25	O-ring P-8	10336	67	Spanner 'B'	29642
26	Return spring 'H'	29726	68	Spanner 'A'	10217
27	O-ring S-32	29727	70	Hex key wrench 5 mm	25777
28	Hanger clip	10192	71	Priming pump (syringe unit)	29624
29	Frame cap 'H'	29728	72	Rotary joint	42501
30	Safety cap	42505	73	Retaining ring E-7	10285
35	Switch	29348	74	O-ring P-7	10149
36	Valve sleeve	29350	75	Nipple	42479
37	Straight joint	42510	76	O-ring S-10	10151
38	Polyurethane tube 125 mm	29729	77	Rotary joint unit	42502

*' Part no. 14 includes part nos. 13, 15, 16, 19 and 20.
*' Part no. 45 includes part nos. 36, 37, 38 and 46.
Parts with circled Index No. are consumable parts. They should be replaced periodically.

ORDERING PARTS

Indicate the tool model, part name, code no. and quantity as shown below when ordering.

Model	Part Name	Code No.	Qty.
AR2000H(A)	Ultra jaws (pair) 'H'	10493	1
AR2000H(A)	Frame head 'H'	29709	1

* When parts are modified for improvement, the older parts are kept in stock for a period of five years.