AR2000M(A) PARTS TABLE

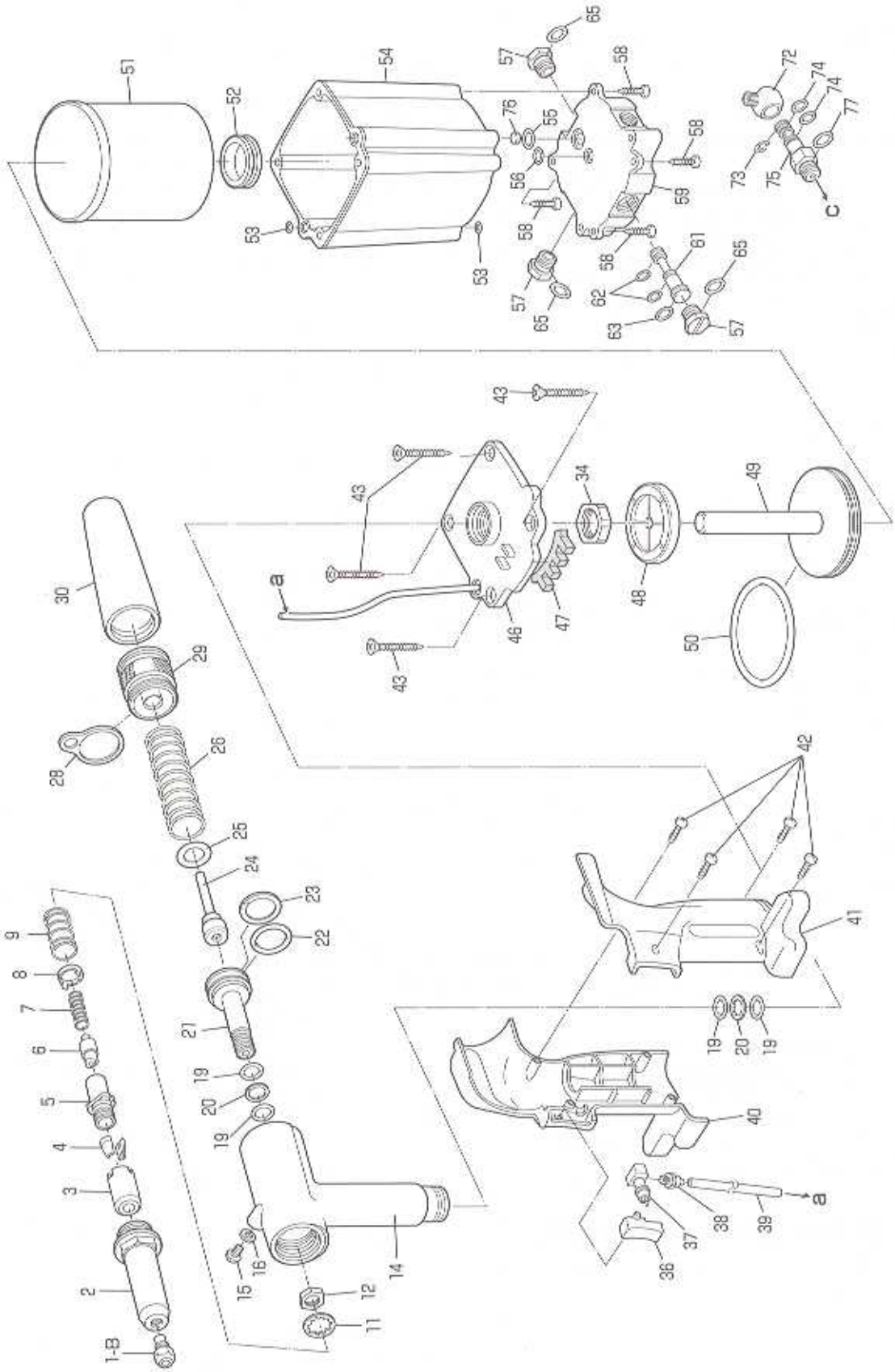

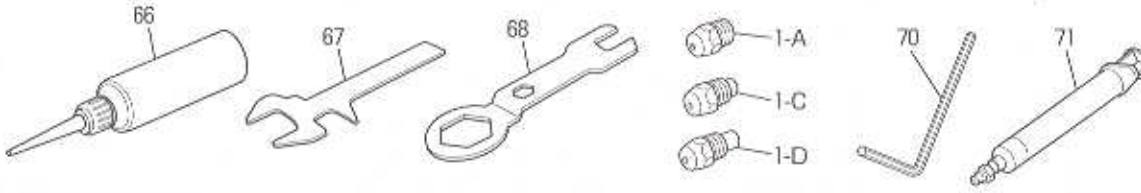

Index No.	Part name	Code No.	Index No.	Part name	Code No.
1－A	Nosepiece 'S' 2.4 (3/32)	10027	40	Frame cover 'R'	42478
1－B	Nosepiece 'S' 3.2 (1/8)	10028	41	Frame cover 'L'	42500
1－C	Nosepiece 'S' 4.0 (5/32)	10029	42	Pan head tapping screw 3×10	29340
1－D	Nosepiece 'S' 4.8 (3/16)	10030	43	Flat head tapping screw 5×35	29367
2	Frame head 'M'	29332	46*2	Cylinder top	42492
③	Jaw case head	10280	47	Muffler	29377
④	Ultra jaws (pair) 'M'	10281	48	Rubber cushion	29736
⑤	Jaw case	10279	49	Air piston unit 'M'	42495
⑥	Jaw pusher	10132	50	O-ring P-60	10134
⑦	Jaw pusher spring	10133	51	Cylinder cup 'M'	29360
8	Jaw case collar	10286	52	Grommet	29361
9	Collar spring	10287	53	O-ring S-5	10276
11	Lock washer	10148	54	Cylinder cover 'M'	29359
12	Jaw case lock nut	10113	55	O-ring P-10	10274
14*1	Frame unit 'MA'	42486	56	O-ring P-6	10150
15	Bleed plug (Hexagon socket head cap screw)	29337	57	Change plug	29375
16	Pack Seal 6 mm	10355	58	Pan head tapping screw 4×20	29610
19	O-ring P-12	10128	59	Cylinder bottom	29366
20	B-ring P-12	10129	61	Spool	29612
21	Oil piston 'Y'	42829	62	O-ring P-5 (4D)	29613
22	O-ring P-22A	10130	63	O-ring P-8 (4D)	29614
23	B-ring P-22A	10131	65	O-ring P-9	10219
24	Piston sleeve	42498	66	"LOBSTER" brand hydraulic oil	10012
25	Flat washer 12 x 24	42504	67	Spanner 'B'	29642
26	Return spring 'M'	29345	68	Spanner 'A'	10141
28	Hanger clip	10106	70	Hex key wrench 5 mm	25777
29	Frame cap 'M'	42487	71	Priming pump (syringe unit)	29624
30	Safety cap (with bottom plate)	42505	72	Rotary joint	42501
34	Frame lock nut	29757	73	Retaining ring E-7	10285
36	Switch	29348	74	O-ring P-7	10149
37	Valve sleeve	29350	75	Nipple	42479
38	Straight joint	42510	76	Rubber plate MA	42836
39	Polyurethane tube 115 mm	29729	77	O-ring S-10	10151

*1 Part no. 14 includes part nos. 15, 16, 19 and 20.
*2 Part no. 46 includes part nos. 37, 38, 39 and 47.
Part no. 49 includes part nos. 48 and 50.

Parts with circled Index No. are cosumable parts. They should be replaced periodically.

ORDERING PARTS

Indicate the tool model, part name, code no. and quantity as shown below when ordering.

Model	Part Name	Code No.	Qty.
AR2000M(A)	Ultra jaws (pair) 'M'	10281	1
AR2000M(A)	Frame head 'M'	29332	1

* When parts are modified for improvement, the older parts are kept in stock for a period of five years.