# AR2000S(A) PARTS TABLE

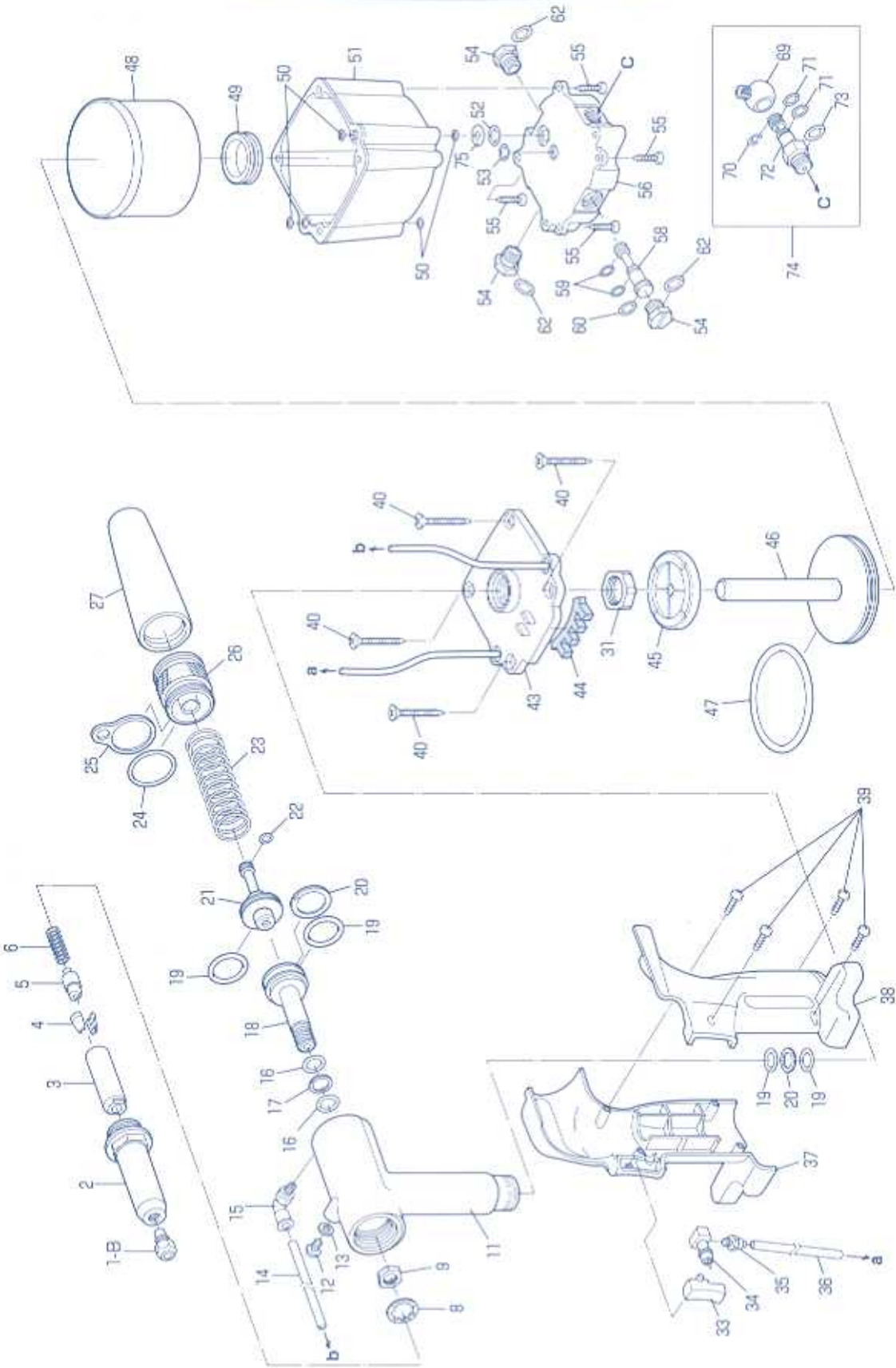

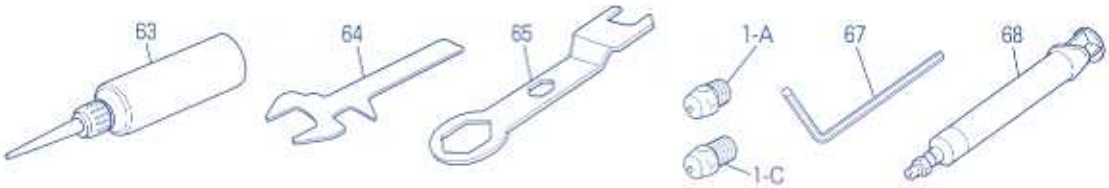


| Index No. | Part name | Code No. | Index No. | Part name | Code No. |
|---|---|---|---|---|---|
| 1－A | Nosepiece 'S' 2.4 (3/32) | 10027 | 37 | Frame cover 'MA-R' | 42478 |
| 1－B | Nosepiece 'S' 3.2 (1/8) | 10028 | 38 | Frame cover 'MA-L' | 42500 |
| 1－C | Nosepiece 'S' 4.0 (5/32) | 10029 | 39 | Pan head tapping screw 3×10 | 29340 |
| 2 | Frame head 'S' | 29801 | 40 | Flat head tapping screw 5×35 | 29367 |
| ③ | Jaw case | 10173 | 43** | Cylinder top | 42492 |
| ④ | Jaws (pair) 'S' | 10032 | 44 | Muffler | 29377 |
| ⑤ | Jaw pusher | 10132 | 45 | Rubber cushion 'H' | 29736 |
| ⑥ | Jaw pusher spring | 10133 | 46 | Air piston unit 'S' | 29820 |
| 8 | Lock washer | 10148 | 47 | O-ring P-60 | 10134 |
| 9 | Jaw case lock nut | 10113 | 48 | Cylinder cup 'S' | 29824 |
| 11*' | Frame unit 'SA' | 44561 | 49 | Grommet | 29361 |
| 12 | Bleed plug (Hexagon socket head cap screw) | 29337 | 50 | O-ring S-5 | 10276 |
| 13 | Pack seal 6 mm | 10355 | 53 | O-ring P-6 | 10150 |
| 14 | Polyurethane tube 220 mm | 44706 | 54 | Change plug | 29735 |
| 15 | Connector | 29354 | 55 | Pan head tapping screw 4×20 | 29610 |
| 16 | O-ring P-12 | 10128 | 56 | Cylinder bottom | 29366 |
| 17 | B-ring P-12 | 10129 | 58 | Spool | 29612 |
| 18 | Oil piston 'X' | 41258 | 59 | O-ring P-5 (4D) | 29613 |
| 19 | O-ring P-18 | 23683 | 60 | O-ring P-8 (4D) | 29614 |
| 20 | B-ring P-18 | 23684 | 62 | O-ring P-9 | 10219 |
| 21 | Back piston 'X' | 41261 | 63 | "LOBSTER" brand hydraulic oil | 10012 |
| 22 | O-ring P-7 | 10149 | 64 | Spanner 'B' | 29642 |
| 23 | Return spring 'S' | 29815 | 65 | Spanner 'A' | 10183 |
| 24 | O-ring S-24 | 10185 | 67 | Hex key wrench 5 mm | 25777 |
| 25 | Hanger clip 'S' | 29819 | 68 | Priming pump (syringe unit) | 29624 |
| 26 | Frame cap 'S' | 29817 | 69 | Rotary joint | 42501 |
| 27 | Safety cap | 42505 | 70 | Retaining ring E-7 | 10285 |
| 31 | Frame lock nut | 29757 | 71 | O-ring P-7 | 10149 |
| 33 | Switch | 29348 | 72 | Nipple | 42479 |
| 34 | Valve sleeve | 29350 | 73 | O-ring S-10 | 10151 |
| 35 | Straight joint | 42510 | 74 | Rotary joint unit | 42502 |
| 36 | Polyurethane tube 115 mm | 44705 | 75 | Exhaust plate | 42838 |

*' Part no. 11 includes part nos. 12, 13, 16, and 17.
** Part no. 43 includes part nos. 34, 35, 36 and 44.
Parts with circled Index No. are consumable parts. They should be replaced periodically.

# ORDERING PARTS

Indicate the tool model, part name, code no. and quantity as shown below when ordering.

| Model | Part Name | Code No. | Qty. |
|---|---|---|---|
| AR2000S(A) | Jaws (pair) 'S' | 10032 | 1 |
| AR2000S(A) | Frame head 'S' | 29801 | 1 |

* When parts are modified for improvement, the older parts are kept in stock for a period of five years.