AR2000S PARTS TABLE

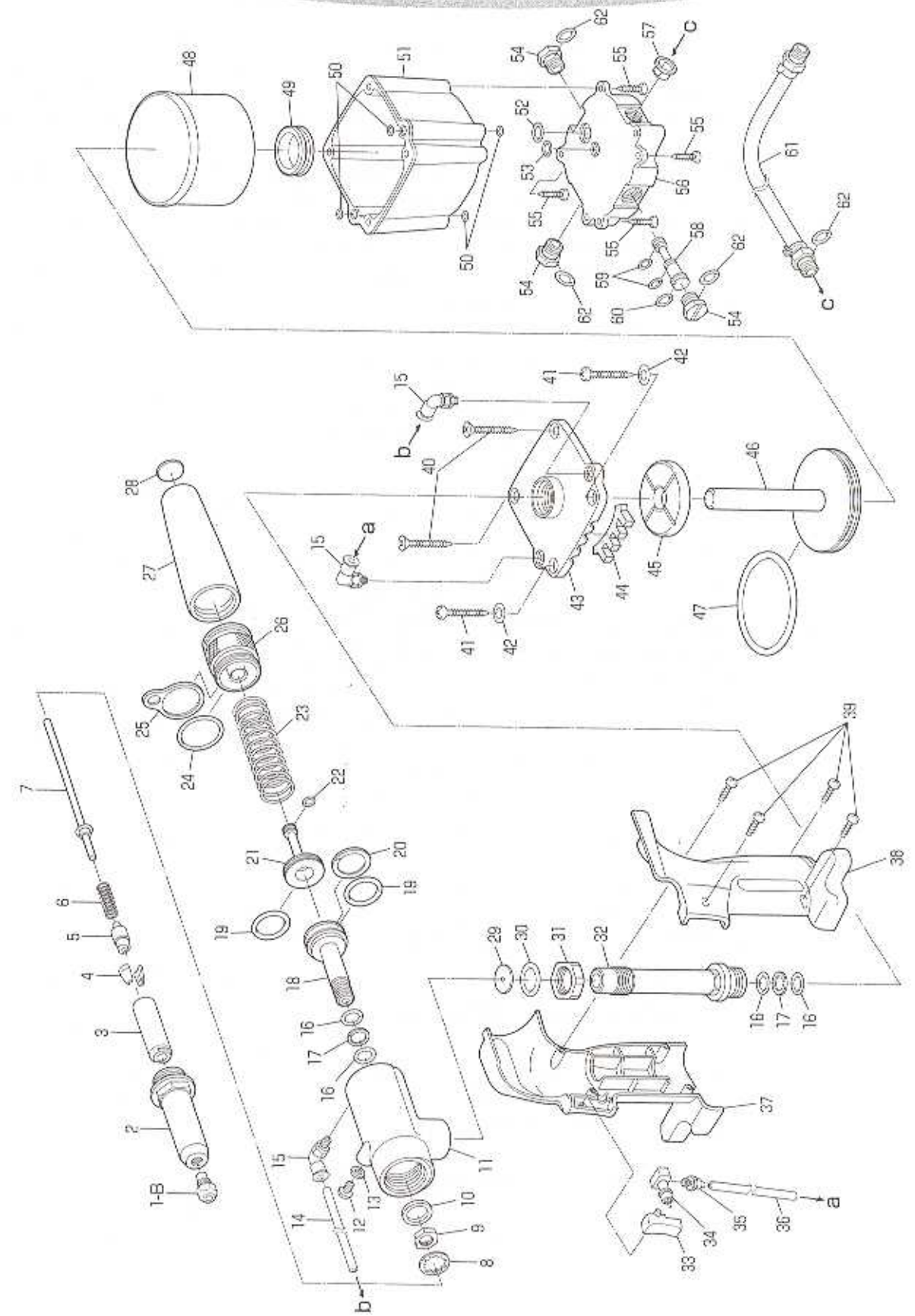

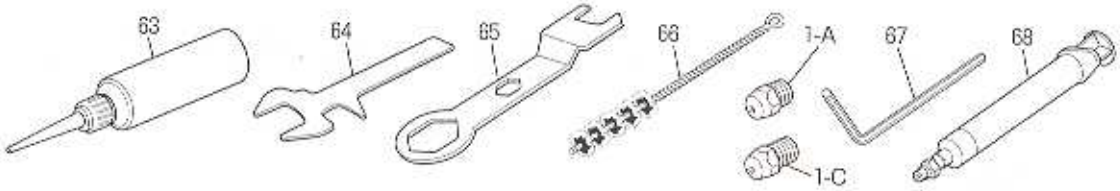

Index No.	Part name	Code No.	Index No.	Part name	Code No.
1－A	Nosepiece 'S' 2.4 (3/32)	10027	35	Terrapin connector	29351
1－B	Nosepiece 'S' 3.2 (1/8)	10028	36	Polyurethane tube 105 mm	29352
1－C	Nosepiece 'S' 4.0 (5/32)	10029	37	Frame cover 'R'	29338
2	Frame head 'S'	29801	38	Frame cover 'L'	29339
3	Jaw case	10173	39	Pan head tapping screw 3×10	29340
4	Jaws (pair) 'S'	10032	40	Flat head tapping screw 5×35	29367
5	Jaw pusher	10132	41	Pan head tapping screw 5×35	29608
6	Jaw pusher spring	10133	42	Flat washer No.5	29609
7	Guide pipe	14492	43	Cylinder top (with muffler)	29634
8	Lock washer	10148	44	Muffler	29377
9	Jaw case lock nut	10113	45	Rubber cushion	29358
10	Stop ring	23634	46	Air piston unit 'S'	29820
11	Frame unit 'S'	29803	47	O-ring P-60	10134
12	Bleed plug (Hexagon socket head cap screw)	29337	48	Cylinder cup 'S'	29824
13	Pack seal 6 mm	10355	49	Grommet	29361
14	Polyurethane tube 205 mm	29353	50	O-ring S-5	10276
15	Connector	29354	51	Cylinder cover 'S'	29822
16	O-ring P-12	10128	52	O-ring P-10	10274
17	B-ring P-12	10129	53	O-ring P-6	10150
18	Oil piston 'S'	29811	54	Change plug	29375
19	O-ring P-18	23683	55	Pan head tapping screw 4×20	29610
20	B-ring P-18	23684	56	Cylinder bottom	29366
21	Back piston 'S'	29814	57	Dust-proof cap	29611
22	O-ring P-7	10149	58	Spool	29612
23	Return spring 'S'	29815	59	O-ring P-5 (4D)	29613
24	O-ring S-24	10185	60	O-ring P-8 (4D)	29614
25	Hanger clip 'S'	29819	61	Air hose unit	29448
26	Frame cap 'S'	29817	62	O-ring P-9	10219
27	Safety cap (with bottom plate)	29641	63	"LOBSTER" brand hydraulic oil	10012
28	Bottom plate	27875	64	Spanner 'B'	29642
29	Shock plate	29378	65	Spanner 'A'	10183
30	O-ring P-18 (1B)	29617	66	Cleaning brush	10143
31	Aluminum lock nut	29381	67	Hex key wrench 5 mm	25777
32	Oil sleeve unit	29633	68	Priming pump (syringe unit)	29624
33	Switch	29348			
34	Valve sleeve	29350			

* Part no. 11 includes part nos. 10, 12, 16, 17, 29 and 30.
Part no. 32 includes part nos. 16 and 17.
Part no. 46 includes part nos. 45 and 47.
Part no. 61 includes part no. 62.

ORDERING PARTS

Indicate the tool model, part name, code no. and quantity as shown below when ordering.

Model	Part Name	Code No.	Qty.
AR2000S	Jaws (pair) 'S'	10032	1
AR2000S	Frame head 'S'	29801	1

* When parts are modified for improvement, the older parts are kept in stock for a period of five years.