AR2000SV(A) PARTS TABLE

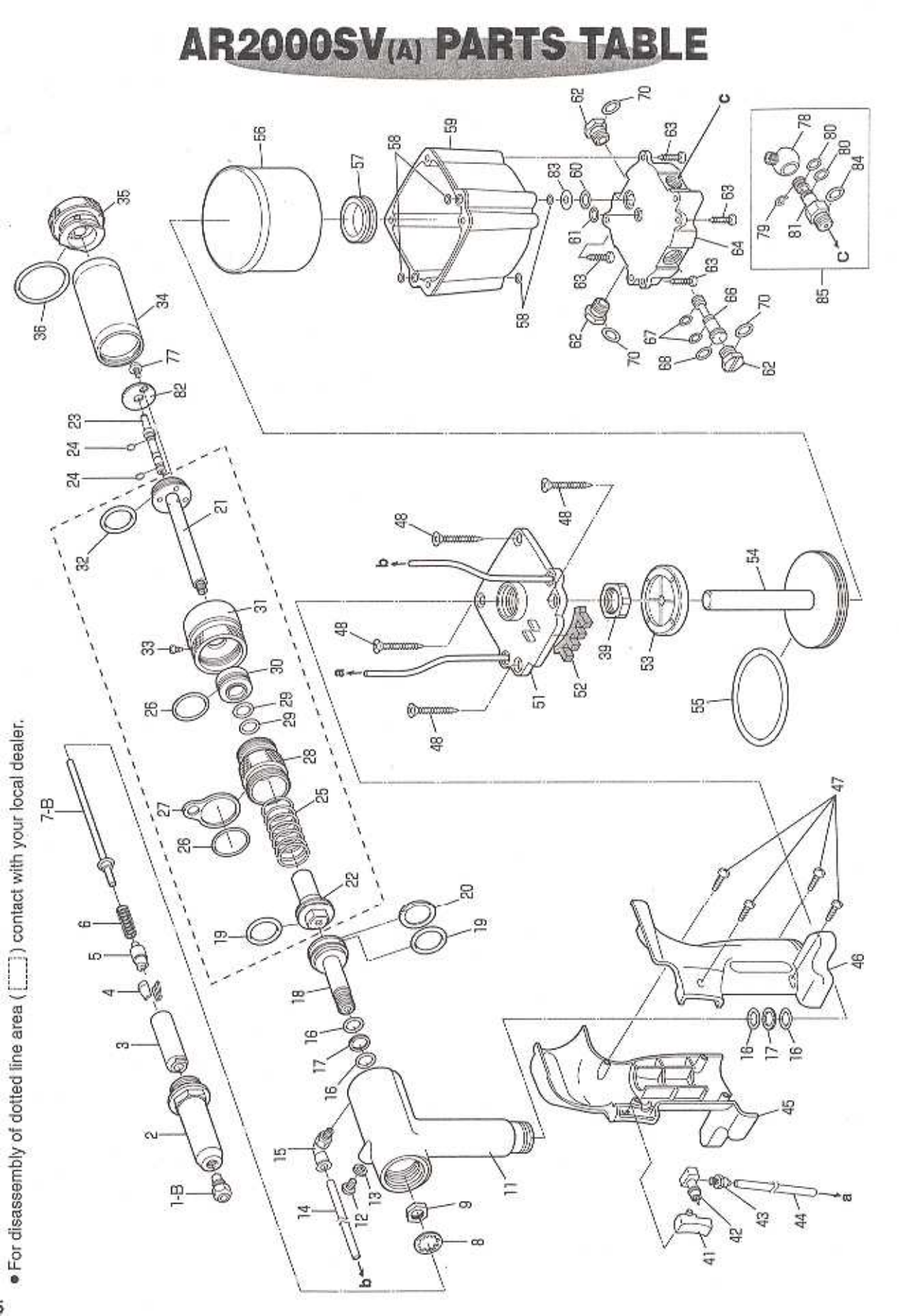

● For disassembly of dotted line area ( ) contact with your local dealer.

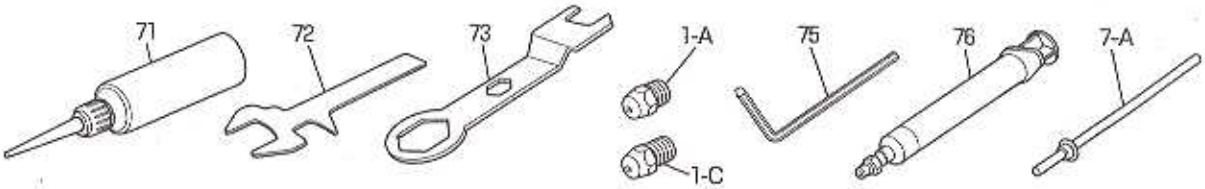

Index No.	Part name	Code No.	Index No.	Part name	Code No.
1−A	Nosepiece 'S' 2.4 (3/32)	10027	41	Switch	29348
1−B	Nosepiece 'S' 3.2 (1/8)	10028	42	Valve sleeve	29350
1−C	Nosepiece 'S' 4.0 (5/32)	10029	43	Miniature straight	42510
2	Frame head 'S'	29801	44	Polyurethane tube 115 mm	44705
③	Jaw case 'S'	10173	45	Frame cover 'MA-R'	42478
④	Jaws (pair) 'S'	10032	46	Frame cover 'MA-L'	42500
⑤	Jaw pusher	10132	47	Pan head tapping screw 3×10	29340
⑥	Jaw pusher spring	10133	48	Flat head tapping screw 5×35	29367
7−A	Guide pipe 'X'	16779	51*3	Cylinder top	42492
7−B	Guide pipe 'Y'	14492	52	Muffler	29377
8	Lock washer	10148	53	Rubber cushion 'H'	29736
9	Jaw case lock nut	10113	54*4	Air piston unit 'S'	29820
11*1	Frame unit 'SA'	44561	55	O-ring P-60	10134
12	Bleed plug (Hexagon socket head cap screw)	29337	56	Cylinder cup 'S'	29824
13	Pack seal 6 mm	10355	57	Grommet	29361
14	Polyurethane tube 220 mm	44706	58	O-ring S-5	10276
15	Connector	29354	59	Cylinder cover 'S'	29822
16	O-ring P-12	10128	60	O-ring P-10	10274
17	B-ring P-12	10129	61	O-ring P-6	10150
18	Oil piston 'X'	41258	62	Change plug	29375
19	O-ring P-18	23683	63	Pan head tapping screw 4×20	29610
20	B-ring P-18	23684	64	Cylinder bottom	29366
21	Back piston 'Y'	41215	66	Spool	29612
22	Flange 'X'	41212	67	O-ring P-5 (4D)	29613
23	Nozzle unit (with O-ring)	41199	68	O-ring P-8 (4D)	29614
24	O-ring S-5	10276	70	O-ring P-9	10219
25	Return spring 'S'	29815	71	"LOBSTER" brand hydraulic oil	10012
26	O-ring S-24	10185	72	Spanner 'B'	29642
27	Hanger clip 'S'	29819	73	Spanner 'A'	10183
28	Frame cap 'SV'	29680	75	Hex key wrench 5 mm	25777
28U	Frame cap unit 'SV'	29705	76	Priming pump (syringe unit)	29624
29	O-ring P-10	10274	77	Cross recessed head screw 6 x 10	20916
30	Air valve (with O-rings)	29701	78	Rotary joint	42501
31*2	Air controller 'Y'	41222	79	Retaining ring E-7	10285
32	O-ring P-30	14445	80	O-ring P-7	10149
33	Pan head tapping screw 3×6	29670	81	Nipple	42479
34	Mandrel tank 'S'	29681	82	Plate	41299
34U	Mandrel tank unit 'S' (with cap)	29837	83	Exhaust plate	42838
35	Tank cap (with O-ring)	29703	84	O-ring S-10	10151
36	O-ring P-34	24311	85	Rotary joint unit	42502
39	Frame lock nut 'H'	29757			

*1 Part no. 11 includes part nos. 12, 13, 16, and 17.
*2 Part no. 31 includes part no. 33.
*3 Part no. 51 includes part nos. 42, 43, 44 and 52.
*4 Part no. 54 includes part nos. 53 and 55.
Part no. 28U includes part nos. 26, 27 and 29.
Parts with circled Index No. are consumable parts. They should be replaced periodically.

ORDERING PARTS

Indicate the tool model, part name, code no. and quantity as shown below when ordering.

Model	Part Name	Code No.	Qty.
AR2000SV(A)	Jaws (pair) 'S'	10032	1
AR2000SV(A)	Frame head 'S'	29801	1

* When parts are modified for improvement, the older parts are kept in stock for a period of five years.