INTENSIFIER UNIT

Explode View

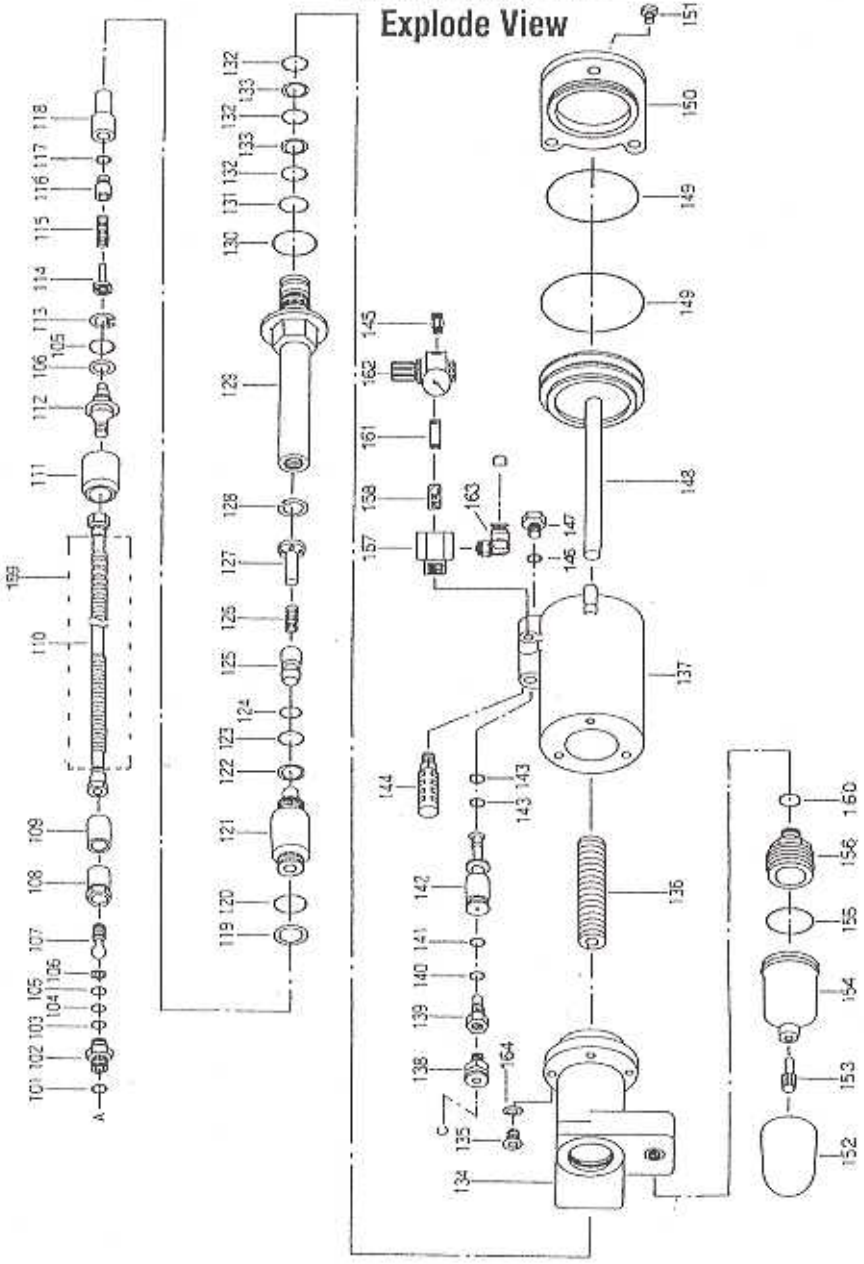

Index No.	Description	Parts Code
149	O-Ring (P-85)	10452
150	Air Cylinder Cap	23678
151	Socket Set Screw (M6x15)	23690
152	Oil Tank Cap	15696
153	Oil Tank Plug	15819
154	Oil Tank	15644
155	O-Ring (G-30)	12445
156	Oil Tank Base	23693
157	Branch Plug	22029
158	Lock Bolt	22030
159	Protective Tube	23668
160	O-Ring (P-12)	10128
161	Long Nipple	24016
162	Air Regulator with Gauge	24014
163	"L" type Air Joint	22034
164	Flat Washer (M6)	24426

*Index No. 129 Oil Cylinder Unit includes:
No. 130 - 1 pc + No. 131 - 1 pc,
No. 132 - 3 pcs + No. 133 - 2 pcs.

Accessories included

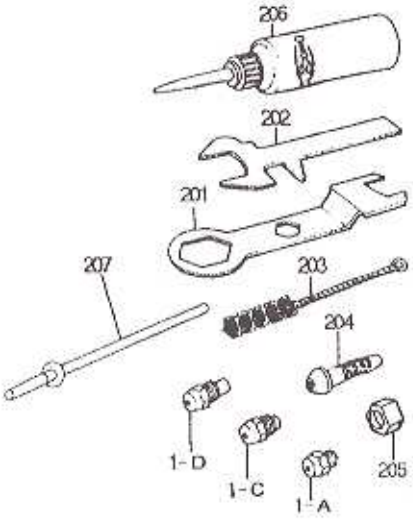

Index No.	Description	Parts Code
1-A	Nosepiece 3/32" (2.4mm)	10027
1-C	Nosepiece 5/32" (4.0mm)	10029
1-D	Nosepiece 3/16" (4.8mm)	10030
201	Spanner 'A'	10141
202	Spanner 'B'	10142
203	Cleaning Brush	10143
204	Air Hose Joint (¼")	10140
205	Hose Joint Nut (¼")	10139
206	Hydraulic Oil in Filler Bottle	10012
207	Guide Pipe 'B' (White)	24367

INTENSIFIER UNIT ... PARTS LIST

Index No.	Description	Parts Code	Index No.	Description	Parts Code
101	O-Ring (P-11)	23663	125	Coupler Valve	23648
102	Swivel Joint	23662	126	Coupler Spring	10133
103	O-Ring (S-14)	10152	127	Coupler Spring Sleeve	23655
104	Cut O-Ring (P-10A)	23738	128	C-type Retaining Ring	23712
105	O-Ring (P-14)	10434	*129	*Oil Cylinder Unit	23687
106	B-Ring (P-14)	10435	130	O-Ring (S-30)	23685
107	Swivel Shaft	23658	131	O-Ring (P-24)	10207
108	Swivel Case	23660	132	O-Ring (P-14)	10434
109	Rubber Bellow	23664	133	B-Ring (P-14)	10435
110	Hydraulic Hose	23644	134	Oil Cylinder Joint	23700
111	Coupler Cover	23652	135	Socket Set Screw (M6x20)	23701
112	Coupler Joint (Male)	23713	136	Returning Spring	23691
113	C-type Retaining Ring	23646	137	Air Cylinder	23706
114	Coupler Spring Sleeve	23655	138	Straight Joint	10273
115	Coupler Spring	10133	139	Spool Cap 'B'	23708
116	Coupler Valve	23648	140	O-Ring (S-12)	23709
117	O-Ring (P-6)	10150	141	O-Ring (P-8)	10336
118	Male Coupler Case	23654	142	Spool	23707
119	B-Ring (P-21)	23718	143	O-Ring (P-5)	12120
120	O-Ring (P-21)	23711	144	Air Silencer	23689
121	Female Coupler Case	23716	145	Nipple (¼")	24017
122	B-Ring (P-18)	23684	146	O-Ring (S-12)	23709
123	O-Ring (P-18)	23683	147	Spool Cap 'A'	23688
124	O-Ring (P-6)	10150	148	Air Piston Unit	23679