ARV−015M(B)

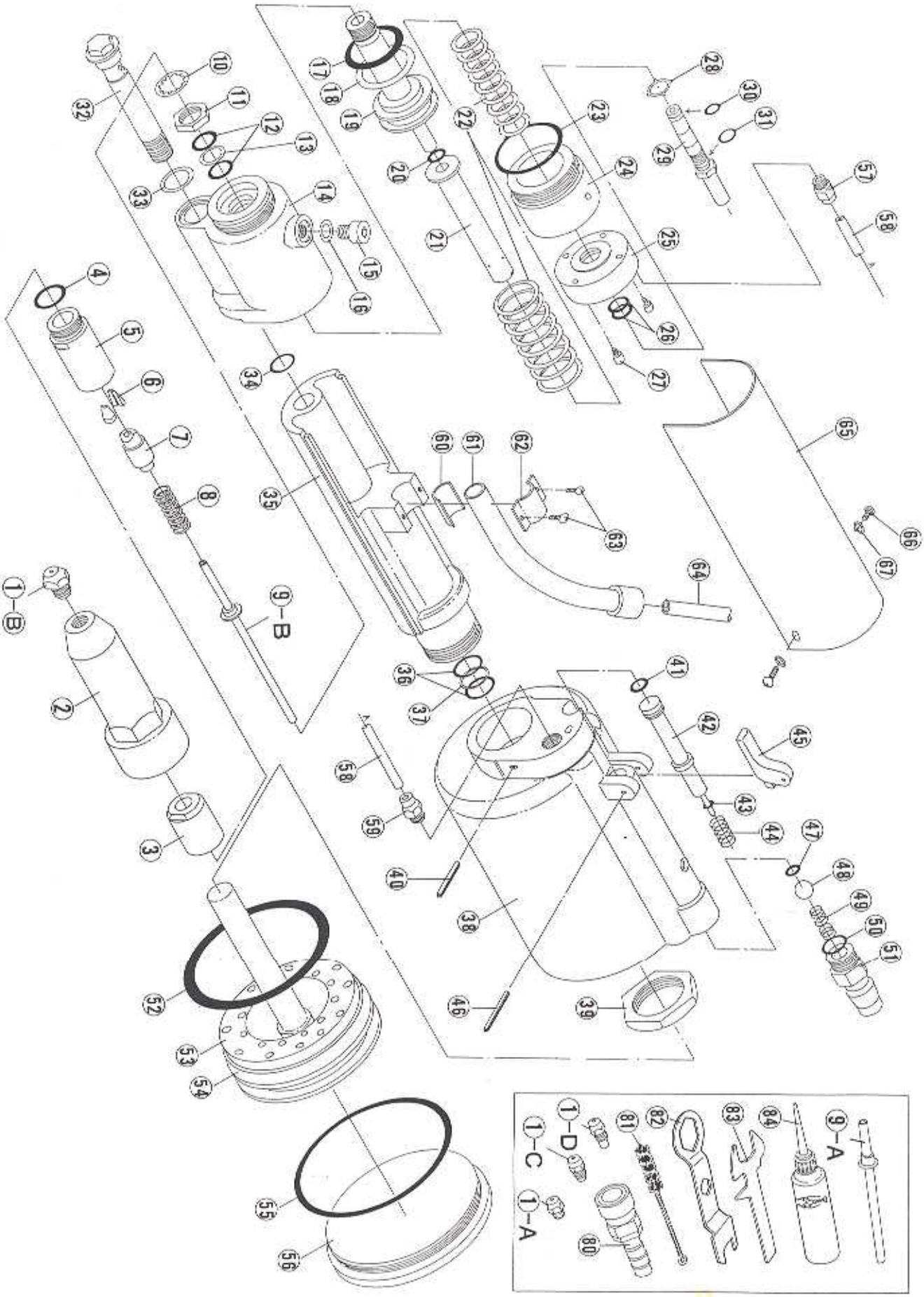
1−B
2
3
4
5
6
7
8
9−B
10
11
12
13
14
15
16
17
18
19
20
21
22
23
24
25
26
27
28
29
30
31
32
33
34
35
36
37
38
39
40
41
42
43
44
45
46
47
48
49
50
51
52
53
54
55
56
57
58
59
60
61
62
63
64
65
66
67
1−D
1−C
1−A
81
82
83
84
9−A
80

ARV-015M (B)

INDEX NO.	CODE	PART NAME
01-A	10027	NOSE PIECE (S) 2.4(3/32)
01-B	10028	NOSE PIECE (S) 3.2(1/8)
01-C	10029	NOSE PIECE (S) 4.0(5/32)
01-D	10030	NOSE PIECE (S) 4.8(3/16)
02	10105	FRAME HEAD
03	10116	JAW CASE HEAD
04	10151	O-RING S-10
05	10115	JAW CASE
06	10281	ULTRA JAW (PAIR) 'M'
07	10132	JAW PUSHER
08	10133	JAW PUSHER SPRING
09-A	14238	GUIDE PIPE A (BRASS/YELLOW)
09-B	14234	GUIDE PIPE B (STEEL/WHITE)
10	10148	LOCK-WASHER A-7/16
11	10113	JAW CASE LOCK NUT
12	10128	O-RING P-12
13	10129	B-RING P-12
14	14310	FRAME ONLY
15	10368	AIR RELEASE SCREW M6X10
16	10355	PACK SEAL 6MM
17	10130	O-RING P-22A
18	10131	B-RING P-22A
19	10241	OIL PISTON
20	10150	O-RING P-6
21	10377	COVERING ADAPTOR
22	14200	RETURN SPRING SET (A+B)
23	10153	O-RING S-26
24	10378	FRAME CAP A
25	10351	FRAME CAP B
26	10274	O-RING P-10
27	10356	FRAME CAP SCREW M4X20
28	10370	WASHER FOR NOZZLE
29	14324	NOZZLE UNIT (INCLUDES 30 & 31)
30	10276	O-RING S-5
31	10220	O-RING S-6
32	10365	CONNECTING BOLT
33	10364	PACK SEAL 12MM
34	10151	O-RING S-10
35	10375	OIL TANK ONLY
36	10128	O-RING P-12

ARV-015M (B)

INDEX NO.	CODE	PART NAME
37	10129	B-RING P-12
38	10373	AIR CYLINDER
39	10112	FRAME LOCK NUT
40	10251	SPRING PIN 3X20
41	10150	O-RING P-6
42	10345	VALVE PUSHER
43	10333	O-RING P-3
44	10246	VALVE PUSHER SPRING
45	10376	TRIGGER
46	10145	SPRING PIN 3X18
47	10150	O-RING P-6
48	10247	VALVE (STEEL BALL 8.0MM)
49	10248	VALVE SPRING
50	10219	O-RING P-9
51	10264	COUPLER, MALE
52	10134	O-RING P-60
53	10114	BUMPER (RUBBER CUSHION)
54	14218	AIR PISTON UNIT (INCLUDE 53)
55	10080	O-RING G-70
56	10374	AIR CYLINDER CAP
57	10511	TOUCH JOINT A (FRONT)
58	10354	AIR PIPE TC-105
59	10273	TOUCH JOINT B (REAR)
60	10369	PIPE SEAT
61	14346	EJECT PIPE UNIT
62	10359	PIPE SUPPORTER
63	10357	SCREW (+) M3X5
64	10381	SHOOT HOSE (2 METERS)
65	10380	COVER
66	10508	PAN HEAD SCREW (+) M4X8
67	10100	ROUND FLAT WASHER
80	10265	COUPLER, FEMALE
81	10143	CLEANING BRUSH
82	10141	SPANNER 'A'
83	10142	SPANNER 'B'
84	10012	HYDRAULIC OIL
101	14344	OIL TANK ASSEMBLY CONSISTS OF 35, 36 & 37
102	14222	AIR PISTON ASSEMBLY CONSISTS OF 52 & 54
103	14187	OIL PISTON ASSEMBLY CONSISTS OF 17, 18 & 19
104	10372	FRAME ASSEMBLY CONSISTS OF 12, 13 & 14