ARV−015S(B)

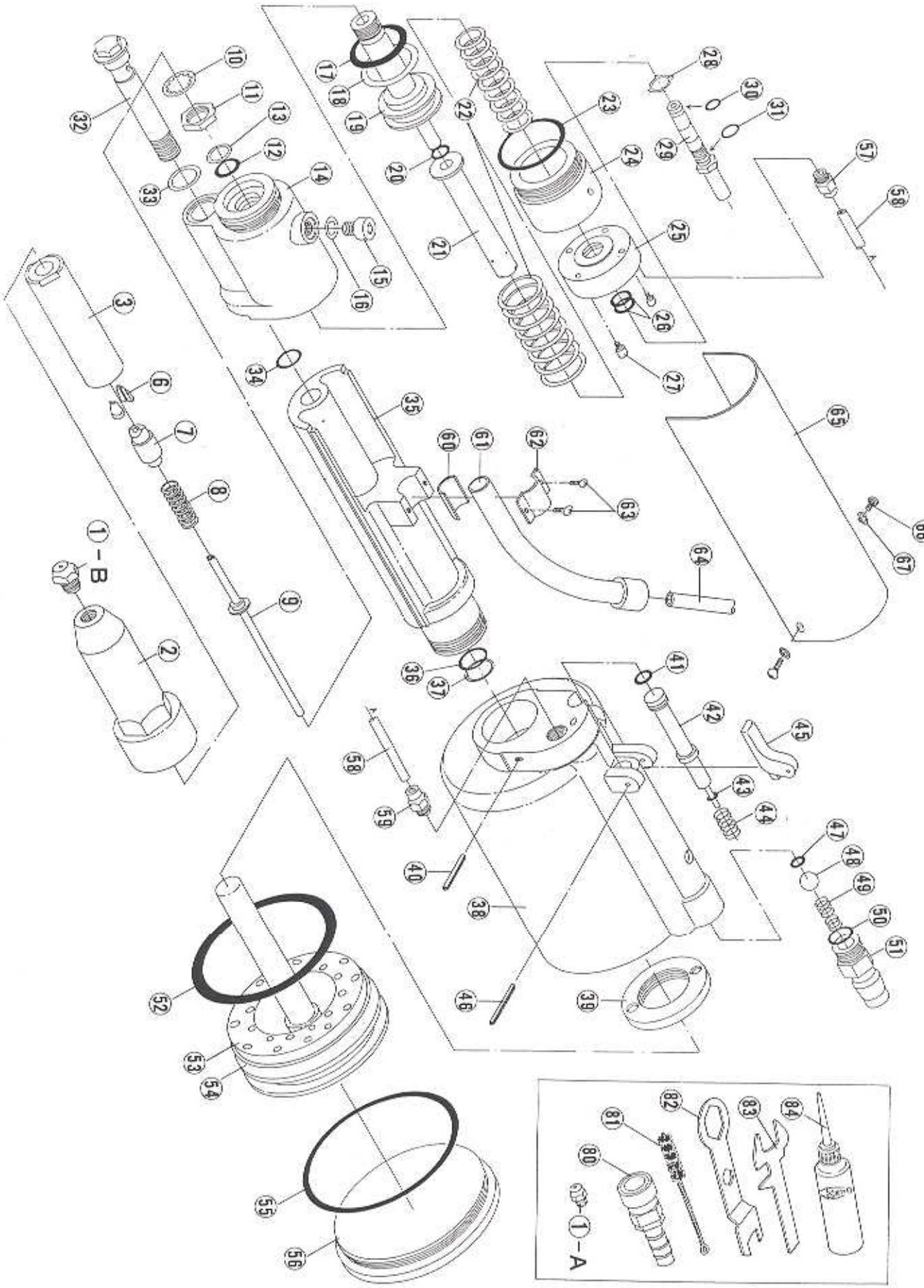

ARV-015S (B)

INDEX NO.	CODE	PART NAME
01-A	10027	NOSE PIECE (S) 2.4(3/32)
01-B	10028	NOSE PIECE (S) 3.2(1/8)
02	10170	FRAME HEAD
03	10173	JAW CASE
06	10032	JAW (SET) 'S'
07	10132	JAW PUSHER
08	10133	JAW PUSHER SPRING
09	14238	GUIDE PIPE 'A' (BRASS/YELLOW)
10	10148	LOCK WASHER A-7/16
11	10113	JAW CASE LOCK NUT
12	10128	O-RING P-12
13	10129	B-RING P-12
14	14356	FRAME ONLY
15	10368	AIR RELEASE SCREW M6X10
16	10355	PACK SEAL 6MM
17	10180	O-RING P-22
18	10181	B-RING P-22
19	10343	OIL PISTON
20	10150	O-RING P-6
21	10349	COVERING ADAPTOR
22	14200	RETURN SPRING A+B (SET)
23	10185	O-RING S-24
24	10350	FRAME CAP A
25	10351	FRAME CAP B
26	10274	O-RING P-10
27	10356	FRAME CAP SCREW M4X20
28	10370	WASHER FOR NOZZLE
29	14334	NOZZLE UNIT (INCLUDES 30 & 31)
30	10276	O-RING S-5
31	10220	O-RING S-6
32	10365	CONNECTING BOLT
33	10364	PACK SEAL 12MM
34	10151	O-RING S-10
35	10346	OIL TANK ONLY
36	10128	O-RING P-12
37	10129	B-RING P-12
38	10341	AIR CYLINDER
39	10348	FRAME LOCK NUT
40	10251	SPRING PIN 3X20
41	10150	O-RING P-6

ARV-015S (B)

INDEX NO.	CODE	PART NAME
42	10345	VALVE PUSHER
43	10333	O-RING P-3
44	10246	VALVE PUSHER SPRING
45	10347	TRIGGER
46	10145	SPRING PIN 3X18
47	10150	O-RING P-6
48	10247	VALVE (STEEL BALL 8.0MM)
49	10248	VALVE SPRING
50	10219	O-RING P-9
51	10264	COUPLER, MALE
52	10182	O-RING P-44
53	10172	BUMPER (RUBBER CUSHION)
54	14342	AIR PISTON UNIT (INCLUDE 53)
55	10421	O-RING G-50
56	10342	AIR CYLINDER CAP
57	10511	TOUCH JOINT A, (FRONT)
58	10354	AIR PIPE TC-105
59	10273	TOUCH JOINT B, (REAR)
60	10369	PIPE SEAT
61	14338	EJECT PIPE UNIT (W/BUSHING)
62	10359	PIPE SUPPORTER
63	10357	SCREW (+) M3X5
64	10362	SHOOT HOSE (2METERS)
65	10360	COVER
66	10508	PAN HEAD SCREW (+) M4X8
67	10100	ROUND FLAT WASHER
80	10265	COUPLER, FEMALE
81	10143	CLEANING BRUSH
82	10183	SPANNER 'A'
83	10142	SPANNER 'B'
84	10012	HYDRAULIC OIL
101	14341	OIL TANK ASSEMBLY CONSISTS OF 35, 36 & 37
102	14330	AIR PISTON ASSEMBLY CONSISTS OF 52 & 54
103	14353	OIL PISTON ASSEMBLY CONSISTS OF 17, 18 & 19
104	10340	FRAME ASSEMBLY CONSISTS OF 12, 13 & 14