RIVETER HEAD
Model: ARV-022M
Explode View

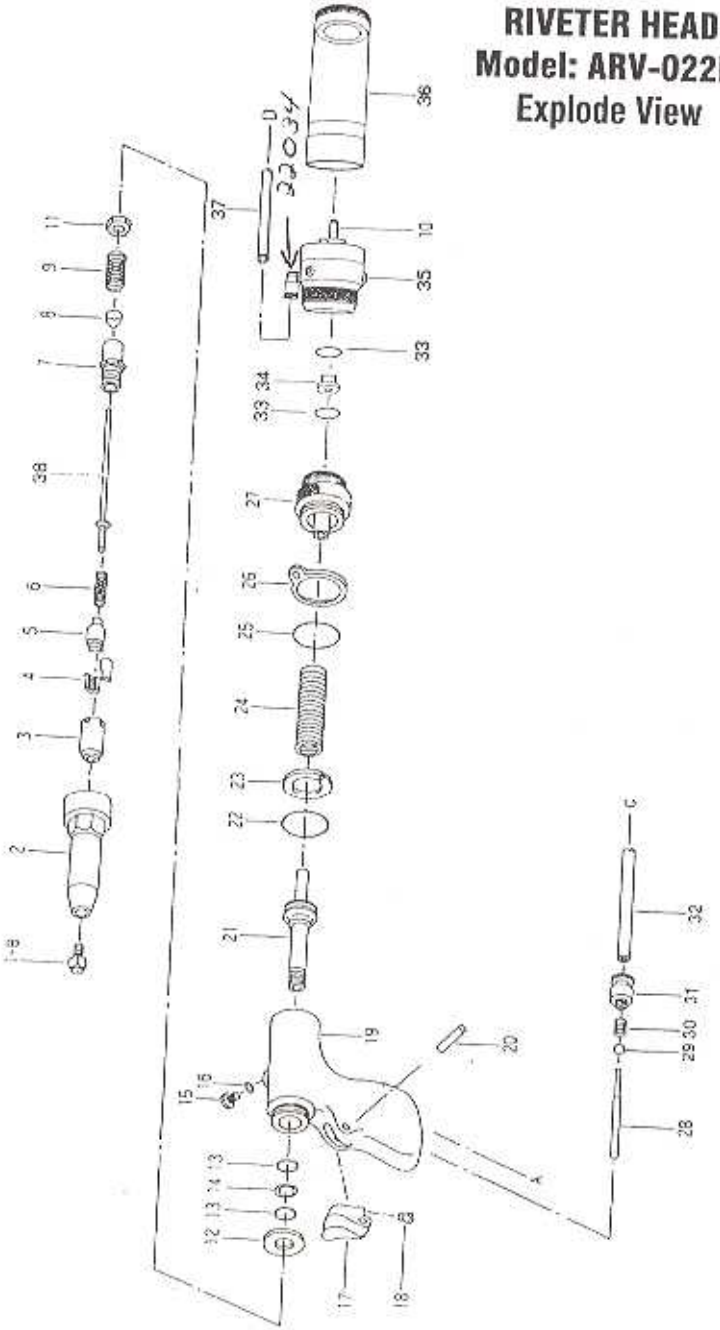

Accessories included

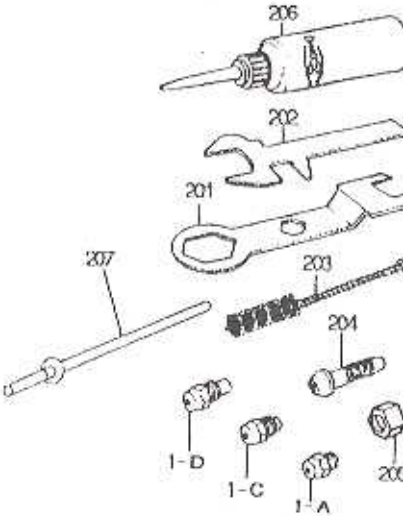

Index No.	Description	Parts Code
1-A	Nosepiece 3/32" (2.4mm)	10027
1-C	Nosepiece 5/32" (4.0mm)	10029
1-D	Nosepiece 3/16" (4.8mm)	10030
201	Spanner 'A'	10141
202	Spanner 'B'	10142
203	Cleaning Brush	10143
204	Air Hose Joint (¼")	10140
205	Hose Joint Nut (¼")	10139
206	Hydraulic Oil in Filler Bottle	10012
207	Guide Pipe 'B' (White)	~~23723~~ 29111

ARV-022M RIVETER HEAD ... PARTS LIST

Index No.	Description	Parts Code
1-B	Nosepiece 1/8" (3.2mm)	10028
2	Frame Head 'M'	10105
3	Jaw case Head	10280
4	Ultra Jaws 'M'	10281
5	Jaw Pusher	10132
6	Jaw Pusher Spring	10133
7	Jaw Case	10279
8	Collar	10286
9	Collar Spring	10287
10	Nozzle Unit 'M'	~~22024~~ 29090
11	Jaw Case Lock Nut	23640
12	Stop Ring	23634
13	O-Ring (P-12)	10128
14	B-Ring (P-12)	10129
15	Bleed Plug	12135
16	O-Ring (P-5)	12120
*17	Trigger Unit	23692
18	Flat Rivet (2x5)	23642
**19	Frame Unit	23635
20	Spring Pin (3x18)	10145
21	Oil Piston	23627
22	Urethane O-Ring (P-22)	25443
23	B-Ring (P-22)	10181
24	Return Spring	23632

Index No.	Description	Parts Code
25	O-Ring (S-24)	10185
26	Hanger Clip	10106
27	Frame Cap	24013
28	Valve Pusher	23667
29	Urethane Ball (Valve) ¼	23669
30	Valve Spring	23670
31	Straight Joint	23671
32	Air Tube (⌀4mmx2.6meter)	23672
33	O-Ring (S-7)	12114
34	Collar	23720
35	Vacuum Unit	23763
36	Mandrel Tank	14242
37	Air Tube (⌀6mmx3meter)Blk	~~24979~~ 22033
38	Guide Pipe 'A'	~~23721~~ 29110
***	Optional Shoot Hose 'M'	10381

10

* #17 Trigger Unit inclues; #18 Flat Rivet.

** #19 Frame Unit includes; #12-1pc, #13-2pcs and #14-1pc.

*** Optional for those who wish to use Shoot Hose instead of #36 Mandrel Container.