EXPLODE VIEW ARV-031M

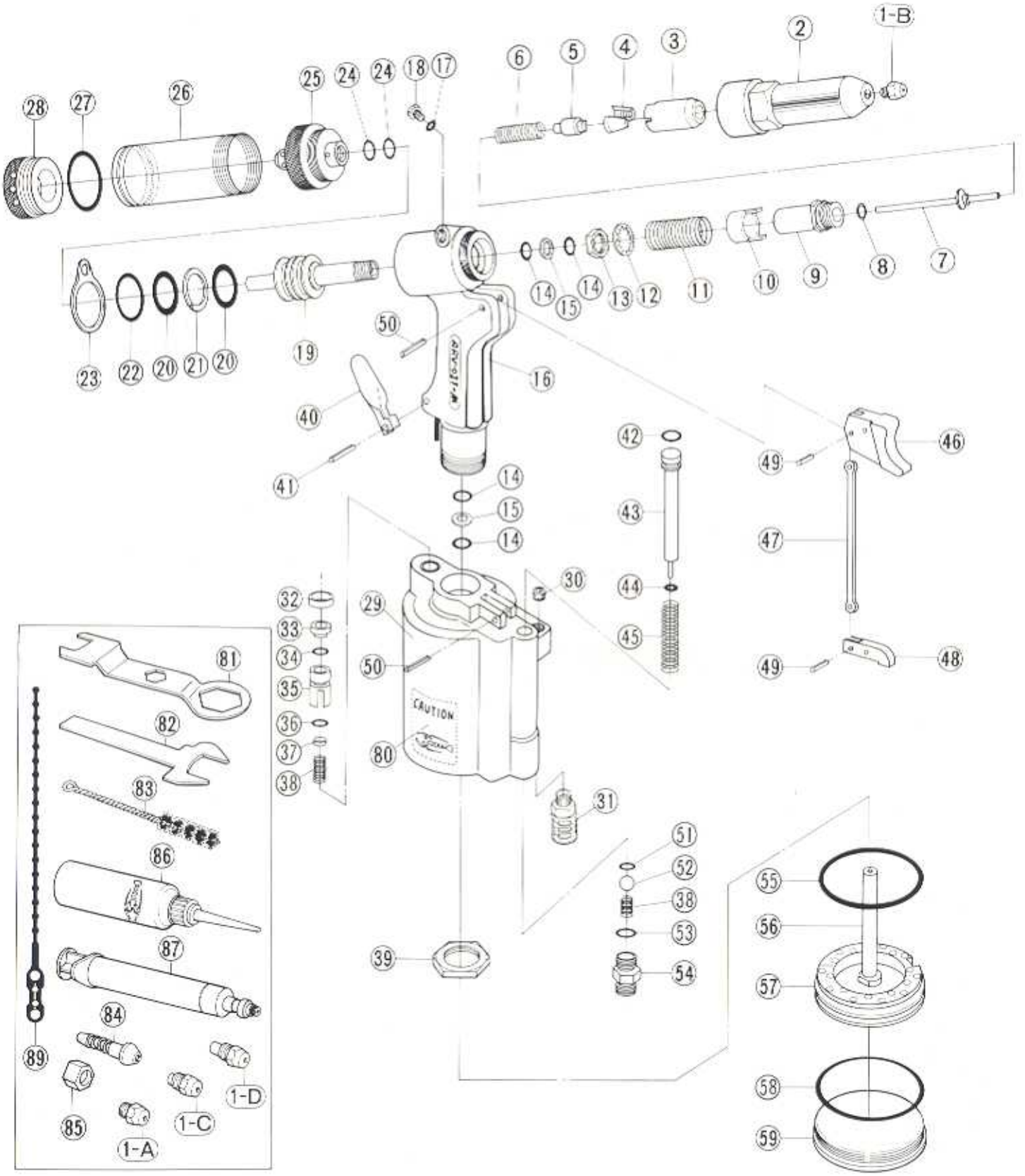

INDEX NO.	CODE NO.	PARTS NAMES
01-A	10027	NOSE PIECE 2.4 (3/32")
01-B	10028	NOSE PIECE 3.2 (1/8")
01-C	10029	NOSE PIECE 4.0 (5/32")
01-D	10030	NOSE PIECE 4.8 (3/16")
01	14450	SET OF 4 NOSE PIECES INCLUDES 01-A, -B, -C, & -D
02	10105	FRAME HEAD
03	10280	JAW CASE HEAD
04	10281	PAIR OF ULTRA JAWS (M)
05	10132	JAW PUSHER
06	10133	JAW PUSHER SPRING
07	14492	GUIDE PIPE
08	10454	O-RING (P-4)
0	10279	JAW CASE
10	10286	COLLAR FOR JAW CASE
11	10287	COLLAR SPRING
12	10148	LOCK WASHER
13	10113	JAW CASE LOCK NUT
14	10128	O-RING (P-12)
15	10129	BACK-UP RING (P-12)
16U	14491	FRAME UNIT (INCLUDES 14&15)
17	12120	O-RING (P-5)
18	12135	BLEED PLUG
19	14452	OIL PISTON
20	10130	O-RING (P-22A)
21	10131	BACK-UP RING (P-22A)
22	10153	O-RING (S-26)
23	10106	HANGER CLIP

INDEX NO.	CODE NO.	PARTS NAMES
24	10274	ORING (P-10)
25	14453	FRAME CAP (BUILT-IN VACUUM SYSTEM)
26	14410	MANDREL CONTAINER
27	14445	O-RING (P-30)
28	14441	CAP FOR MANDREL CONTAINER
29	14451	AIR CYLINDER
30	14359	PLUG
31	14355	SILENCER
32	14471	COLLAR FOR CONTROL VALVE
33	14463	VALVE B
34	10276	O-RING (S-5)
35	14459	VALVE A
36	14475	O-RING (S-8)
37	14467	DISC VALVE
38	10248	VALVE SPRING
39	10112	FRAME LOCK NUT
40	14476	THUMB TRIGGER
41	14480	SPRING PIN (2×14)
42	10149	O-RING (P-7)
43	14464	VALVE PUSHER
44	10333	O-RING (P-3)
45	14472	VALVE PUSHER SPRING
46	10254	MAIN TRIGGER
47	10243	CONNECTOR
48	10242	TRIGGER LEVER
49	10147	SPRING PIN (3×6)
50	10145	SPRING PIN (3×18)

PARTS LIST

INDEX NO.	CODE NO.	PARTS NAMES
51	10150	O-RING (P-6)
52	10247	VALVE (STEEL BALL 8.0φ)
53	10219	O-RING (P-9)
54	14484	NIPPLE 1/4-1/4
55	10134	O-RING (P-60)
56	14218	AIR PISTON UNIT (INCLUDES #57 BUMPER)
57	10114	BUMPER (RUBBER CUSHION)
58	10080	O-RING (G-70)
59	14056	AIR CYLINDER CAP
80	15620	DECAL, CAUTION
81	10141	SPANNER A
82	10218	SPANNER B
83	10143	CLEANING BRUSH
84	10140	AIR HOSE JOINT 1/4"
85	10139	AIR HOSE JOINT NUT
86	10012	HYDRAULIC OIL
87	14142	PRIMING PUMP
89	15304	VINYL TIE (BAND)