Machinery Mounts

Featuring: Lattice Mounts
Chan-L™ Mounts
Leveling Mounts
Industrial Shock Mounts

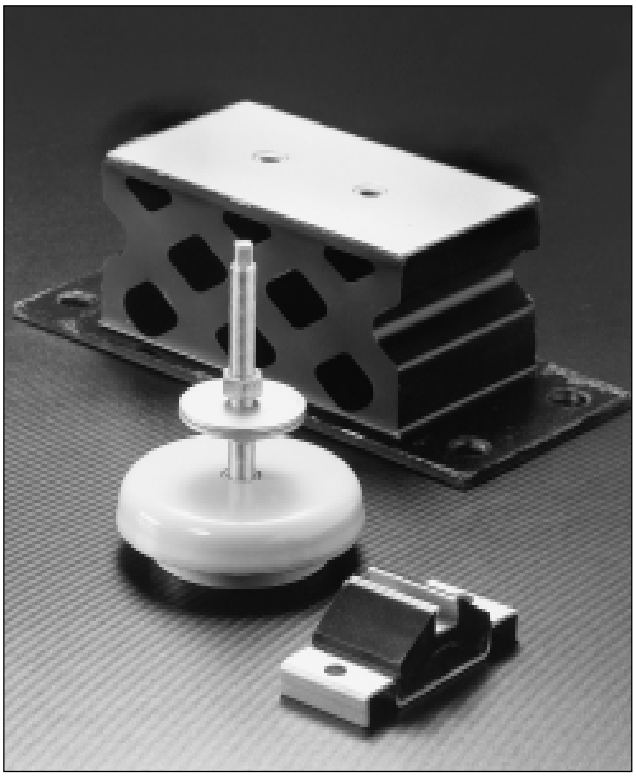

Lord Machinery Mounts are designed to support heavy equipment and isolate intermittent or continuous vibration. The result is greater machine accuracy, longer service life, smoother operation and reduced maintenance. These mounts are available in four types to suit different needs.

Lattice Mounts are recommended for applications where disturbing frequencies are as low as 6 Hz. Their lattice design provides a soft vertical spring rate combined with lateral stability. Typical applications include shakerscreens, sifters, rubber mills, air compressors and large engines/generators.

Chan-L™ Mounts are recommended for machines where vertical disturbing frequencies are 600 cpm or higher. Their elastomer-supported channel design features a soft vertical spring rate. The design incorporates built-in protection against metal-to-metal bottoming. Typical applications include separating and grading screens and shakeouts.

Leveling Mounts provide the ability to level equipment and machinery. These mounts offer a vertical natural frequency under maximum load of 12 Hz. They are constructed of a neoprene elastomer, which resists oil, ozone and caustic materials, and a high-visibility yellow housing made of high strength steel.

Industrial Shockmounts efficiently control shock and structural noise transmission from heavy industrial machinery. Adjacent controls, sensitive instruments and precision machines are protected from impact disturbances which could hamper their performance. Worker comfort is increased, and building structures need less maintenance.

Features and Benefits:

- High-efficiency, multi-directional isolation of low frequency vibration.
- Extremely rugged and require no maintenance.
- Easily installed.
- Long service life.

Machinery Mounts

Lattice Mounts

Specifications and Dimensions: Table 1.

Part Number	Type	Maximum Static Load		Deflection		Part Dimensions							
						A		B		C		D	
		lbs	N	in	mm	in	mm	in	mm	in	mm	in	mm
J-5984-19†	I	375	1668	.62	15.7	9.75	247.7	8.12	206.2	5.50	139.7	❶	❶
J-5984-11	I	425	1890	.62	15.7	9.75	247.7	8.12	206.2	5.50	139.7	❶	❶
J-5984-20†	I	640	2847	.62	15.7	9.75	247.7	8.12	206.2	5.50	139.7	❶	❶
J-4976-8	I	650	2891	.62	15.7	12.50	317.5	10.88	276.4	8.25	209.6	2.75	69.9
J-4976-9	I	850	3781	.62	15.7	12.50	317.5	10.88	276.4	8.25	209.6	2.75	69.9
J-1575-1†	II	1000	4448	.25	6.4	8.25	209.6	—	—	6.25	158.8	❶	❷
J-4557-13	I	1000	4448	.50	12.7	12.00	304.8	10.38	263.7	8.50	215.9	2.75	69.9
J-5665-35	I	1300	5783	1.00	25.4	14.23	361.4	12.44	316.0	9.06	230.1	❷	❷
J-5665-32†	I	2000	8896	1.00	25.4	18.60	472.4	16.88	428.8	13.50	342.9	4.50	114.3
J-5665-33	I	3000	13,345	1.00	25.4	18.60	472.4	16.88	428.8	13.50	342.9	4.50	114.3
J-5665-34	I	4000	17,793	1.00	25.4	18.60	472.4	16.88	428.8	13.50	342.9	4.50	114.3

❶ One hole centered in top plate. ❷ Two holes midway in top plate. † Non-Stock Item, please contact Lord Corporation for availability.

Lattice Mounts

Specifications and Dimensions: Table 2.

Part Number	Part Dimensions											
	E		F		G		H		J		M	
	in	mm	in	mm	in	mm	in	mm	in	mm	in	mm
J-5984-19†	4.50	114.3	2.06	52.3	3.38	85.9	4.91	124.7	.76	19.3	—	—
J-5984-11	4.50	114.3	2.06	52.3	3.38	85.9	4.19	106.4	.76	19.3	—	—
J-5984-20†	4.50	114.3	2.06	52.3	3.38	85.9	4.91	124.7	.76	19.3	—	—
J-4976-8	5.50	139.7	3.25	82.6	4.56	115.8	4.19	106.4	.76	19.3	—	—
J-4976-9	5.50	139.7	3.25	82.6	4.56	115.8	4.19	106.4	.76	19.3	—	—
J-1575-1†	5.75	146.1	5.00	127.0	5.75	146.1	1.77	44.9	.39	9.9	—	—
J-4557-13	5.00	127.0	3.25	82.6	4.08	103.6	3.50	88.9	.76	19.3	—	—
J-5665-35	9.14	232.2	5.00	127.0	7.62	193.5	6.08	154.4	.76	19.3	5.00	127.0
J-5665-32†	9.14	232.2	5.00	127.0	7.62	193.5	6.08	154.4	.76	19.3	—	—
J-5665-33	9.14	232.2	5.00	127.0	7.62	193.5	6.08	154.4	.76	19.3	—	—
J-5665-34	9.14	232.2	5.00	127.0	7.62	193.5	6.08	154.4	.76	19.3	—	—

† Non-Stock Item, please contact Lord Corporation for availability.

Installation View

Figure 1

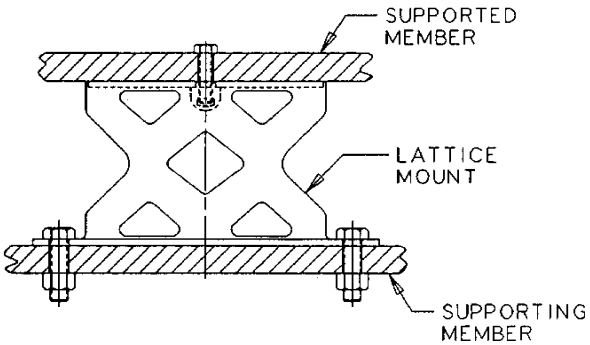

Part Dimension— Type I

Figure 2

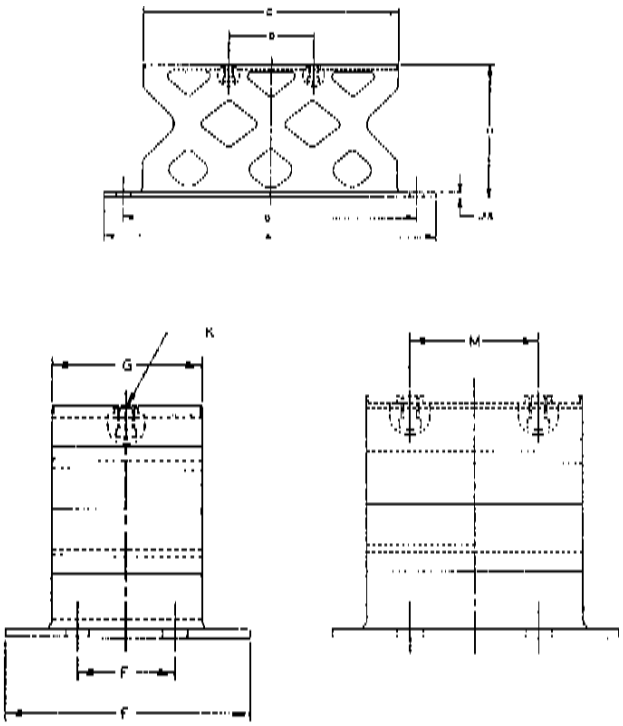

Lattice Mounts

Specifications and Dimensions: Table 3.

Part Number	Part Dimension	Weight Each	
	K ❸	lbs	KG
J-5984-19†	.625-18UNF-2B	5.8	2.6
J-5984-11	.500-20UNF-2B	5.8	2.6
J-5984-20†	.625-18UNF-2B	5.8	2.6
J-4976-8	.500-20UNF-2B	10.6	4.8
J-4976-9	.500-20UNF-2B	10.6	4.8
J-1575-1†	.375-16UNC-2B	3.7	1.7
J-4557-13	.500-20UNF-2B	9.2	4.2
J-5665-35	.500-20UNF-2B	17.3	7.8
J-5665-32†	.500-20UNF-2B	26.5	12.0
J-5665-33	.500-20UNF-2B	26.5	12.0
J-5665-34	.500-20UNF-2B	26.5	12.0

❸ Maximum permissible depth of thread engagement is .53".

† Non-Stock Item, please contact Lord Corporation for availability.

Part Dimension— Type II

Figure 3

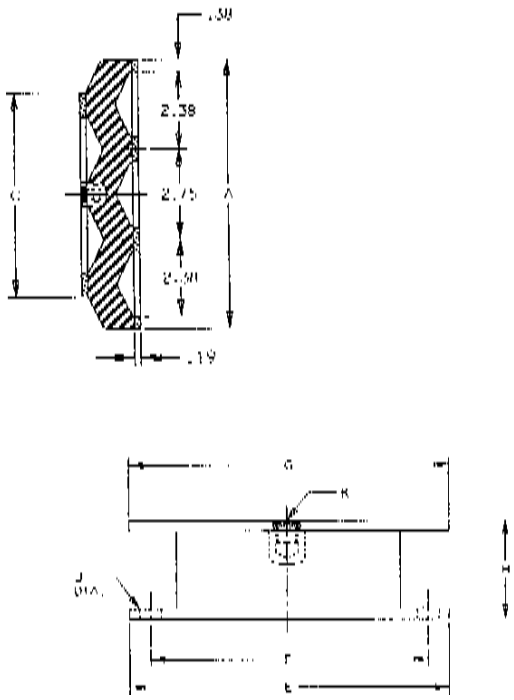

Machinery Mounts

Chan-L™ Mounts

Specifications and Dimensions: Table 1.

Part Number	Type	Maximum Static Load Rating				Part Dimensions Under No Load							
		Load		Deflection		A		B		C		D	
		lbs	N	in	mm	in	mm	in	mm	in	mm	in	mm
J-2170-1	II	50	222	.25	6.4	1.00	25.4	❶	❶	3.69	93.7	4.50	114.3
J-2171-1	II	100	448	.25	6.4	2.00	50.8	❶	❶	3.69	93.7	4.50	114.3
J-2172-1	I	200	889	.25	6.4	4.00	101.6	2.50	63.5	3.69	93.7	4.50	114.3
J-2173-1	I	400	1779	.25	6.4	8.00	203.2	6.00	152.4	3.69	93.7	4.50	114.3

❶ One hole centered in each side of mount top plate. **Materials:** Steel and Natural Rubber.

Chan-L Mounts

Specifications and Dimensions: Table 2.

Part Number	Part Dimensions Under No Load								Weight Each	
	E		F		G ❷		H Ø			
	in	mm	in	mm	in	mm	in	mm	lbs	Kg
J-2170-1	2.75	69.9	1.56	39.6	.59	15.0	.41	10.4	.25	0.1
J-2171-1	2.75	69.9	1.56	39.6	.59	15.0	.41	10.4	.50	0.2
J-2172-1	2.75	69.9	1.56	39.6	.59	15.0	.41	10.4	1.06	0.5
J-2173-1	2.75	69.9	1.53	38.9	.59	15.0	.41	10.4	2.16	1.0

❷ Provides opening for 3/8" (9.5mm) hex or square head bolt. **Materials:** Steel and Natural Rubber.

Vibration Problems: Lord Shock Mounts are specifically engineered to isolate vertical shocks and reduce transmission of structural noise through floors. If your application involves intermittent or continuous vibration frequencies above 600 cycles per minute, use Lord Chan-L™ Mounts. If frequencies below 600 cycles per minute are involved, use Lord Lattice Mountings.

Installation View

Figure 1

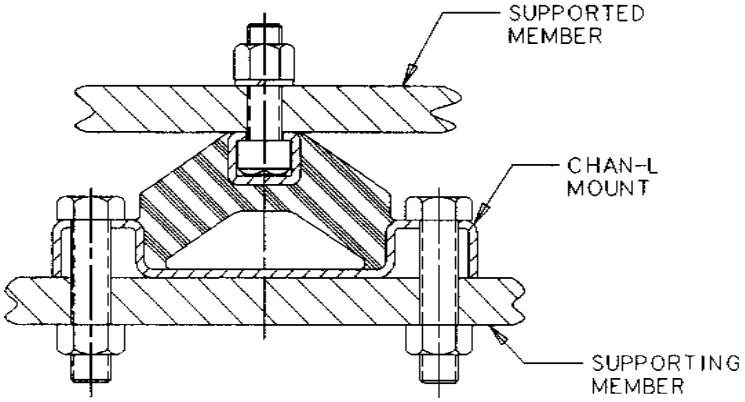

Part Dimension— Type I

Figure 2

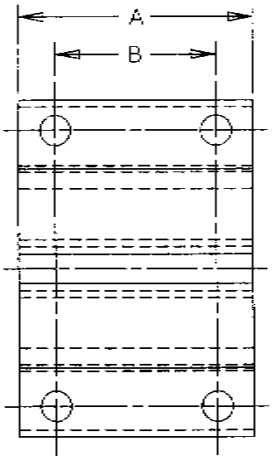

Part Dimension— Type II

Figure 3

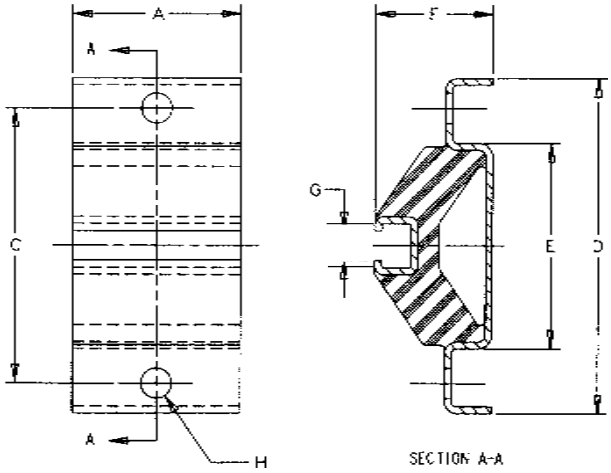

Machinery Mounts

Leveling Mounts

Specifications and Dimensions: Table 1.

Part Number	Maximum Load Per Mount		Adjusting Bolt		Part Dimensions				Weight Each	
					D		H-Height (Free)			
	lbs	N	in	mm	in	mm	in	mm	lbs	Kg
J-16461-4	1000	4448	1/2 - 13UNC x 5"	127	4-3/4"	120.7	1-1/2"	38.1	2.5	1.1
J-16462-4	4500	20017	3/4 - 10UNC x 5"	127	6-1/4"	158.8	1-5/8"	41.3	5.0	2.3
J-16462-7*	4500	20017	3/4 - 10UNC x 5"	127	6-1/4"	158.8	1-5/8"	41.3	5.0	2.3

*J-16462-7 has stainless steel bolt and hardware.

Maximum adjustment is 1/2" (12.7mm). Do not exceed this amount.
Metal housing made of high strength steel — high visibility yellow paint (OSHA approved).
Elastomer: neoprene compounded to resist oil, ozone and caustic material.

Adjustment bolt and lock nut included.
Vertical natural frequency under maximum load: 12 Hz.

Part Dimensions

Figure 1

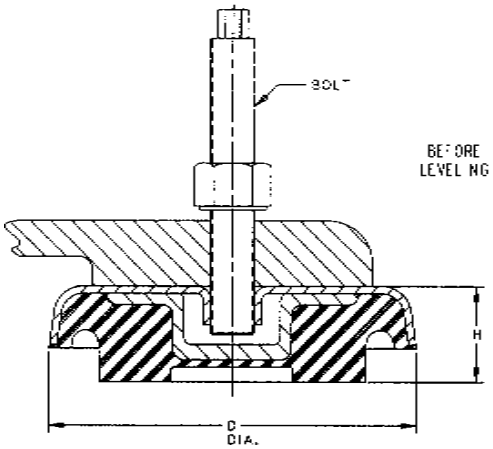

Figure 2

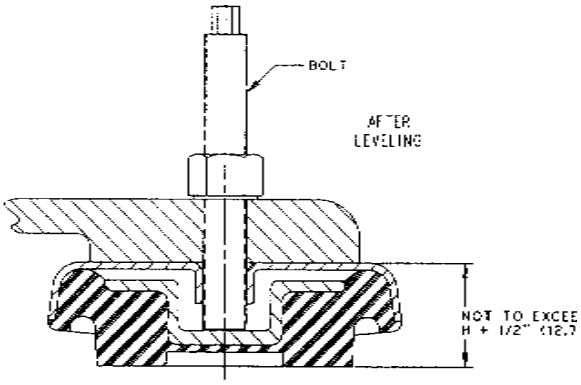

Installation: Before installing, be sure the mounts are the right ones for your machine.
1. Remove adjusting bolt and lock nut from mount.
2. Raise machine and slide mount under foot.
3. Insert adjusting bolt through clearance hole in foot and engage threads in mount.
4. Lower machine onto mounts.
5. Turn bolt until it bottoms.

To Level:
6. Level machine by turning the adjusting bolt.
7. Tighten lock nut against machine base.

Important: Maximum adjustment is 1/2" (12.7mm). Do not exceed this amount. If additional height is required, use blocks or shims.

Machinery Mounts

Industrial Shock Mounts

Specifications and Dimensions: Table 1.

Part Number	Figure	Maximum Axial Load		Deflection @ Maximum Axial Load		Part Dimensions							
						A		B		C - Diameter		D	
		lbs	N	in	mm	in	mm	in	mm	in	mm	in	mm
J-2919-1	1	750-1500	3336-6672	.03	.762	2.5	63.5	—	—	.656	16.7	1.19	30.2
J-2867-1	1	1500-3000	6672-13,345	.03	.762	4	101.6	—	—	.656	16.7	1.19	30.2
J-2866-1	2	3000-7500	13,345-33,362	.03	.762	8	203.2	4	101.6	.656	16.7	1.19	30.2

Parts made of Neoprene Elastomer.

Industrial Shock Mounts

Specifications and Dimensions: Table 2.

Part Number	Part Dimensions				
	E	F		G	
		in	mm	in	mm
J-2919-1	5/8-11UNC-2B	5.5	139.7	7	177.8
J-2867-1	5/8-11UNC-2B	5.5	139.7	7	177.8
J-2866-1	5/8-11UNC-2B	5.5	139.7	7	177.8

Parts made of Neoprene Elastomer.

Installation View

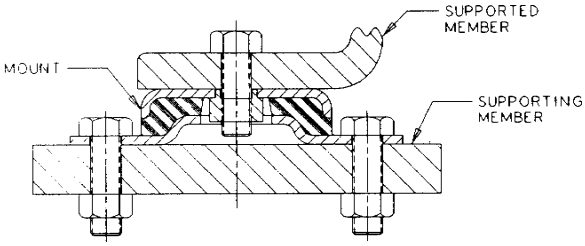

Part Dimensions

Figure 1

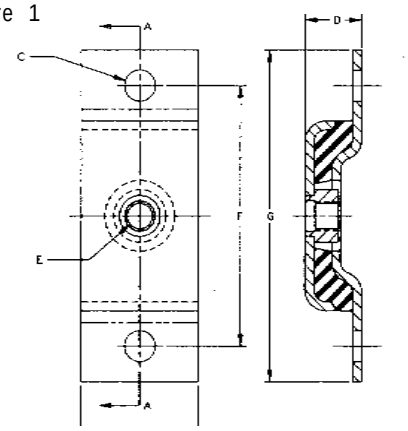

Figure 2

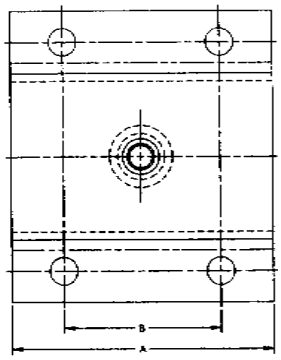

Installation: Each Lord Shock Mount is only 1-3/16" (30.16mm) high. It requires minimal lifting of machinery, and does not shift the machine's center of gravity. The top plate of each Shock Mount is tapped to receive a standard 5/8-11UNC-2B bolt for attaching to the machine. Through holes are provided on each side of the bottom plate extension for bolting the Shock Mount to the floor.

Vibration Problems: Lord Shock Mounts are specifically engineered to isolate vertical shocks and reduce transmission of structural noise through floors. If your application involves intermittent or continuous vibration frequencies above 600 cycles per minute, use Lord Chan-L™ Mounts. If frequencies below 600 cycles per minute are involved, use Lord Lattice Mountings.